ORDER NO. AVS0103339C8

Service Manual

Digital Disk Recorder

WJ-HD500

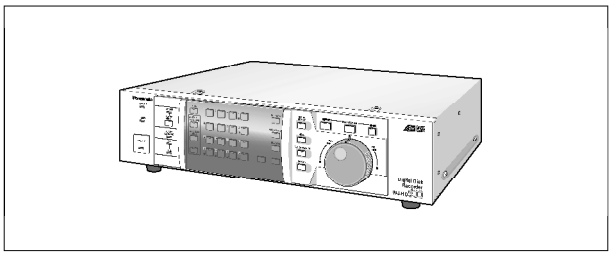

SPECIFICATIONS

General

Power Source :	220-240 V AC, 50 Hz
Power Consumption :	55 W
Ambient Operating Temperature :	+5°C - +45°C (41°F - 113°F)
Ambient Operating Humidity :	Less than 85 %
Dimensions :	420 mm (W) × 88 mm (H) × 360 mm (D) [16 0/16" (W) × 3 7/16" (H) × 13 3/4" (D)]
Weight :	8 kg (17.6 lbs.)

Input and Output

Video Input :	1.0 V[p-p]/75 Ω Composite video signal with 75 Ω Automatic Termination / Looping through (x16)
Video Output :	1.0 V[p-p]/75 Ω Composite video signal Looping through (x16)
Spot Output :	1.0 V[p-p]/75 Ω Composite video signal (x1)
Multiscreen Output :	1.0 V[p-p]/75 Ω Composite video signal (x1)
Audio Input :	-10 dB unbalanced, RCA standard jack
Audio Output :	-10 dB unbalanced, RCA standard jack
Extension Storage Port :	SCSI Interface 50-pin Half Pitch D-sub connector (x1)
Copy Port :	SCSI Interface 50-pin Half Pitch D-sub connector (x1)
Control Port :	25-pin Full Pitch D-sub connector (x1)
Alarm Port :	25-pin Full Pitch D-sub connector (x1)
Data Port :	RS-485 6-conductor modular jack (RJ-11)
Remote Port :	For Exclusive Remote Controller, serial interface (RJ-11)
Serial Port :	RS-232C 9-pin Full Pitch D-sub connector
10/100BASE-T Port :	10Base-T and 100Base-TX, 8-conductor modular jack (RJ-45) (Installed Optional Network Board)

Weight and dimensions shown are approximate.
Specifications are subject to change without notice.

Panasonic

©2001 Matsushita Communication Industrial Co., Ltd. All rights reserved. Unauthorized copying and distribution is a violation of law.

⚠ WARNING

This service information is designed for experienced repair technicians only and is not designed for use by the general public.
It does not contain warnings or cautions to advise non-technical individuals of potential dangers in attempting to service a product.
Products powered by electricity should be serviced or repaired only by experienced professional technicians. Any attempt to service or repair the product or products dealt with in this service information by anyone else could result in serious injury or death.

CAUTION
RISK OF ELECTRIC SHOCK
DO NOT OPEN

CAUTION:
TO REDUCE THE RISK OF ELECTRIC SHOCK, DO NOT REMOVE COVER (OR BACK). NO USER SERVICEABLE PARTS INSIDE.
REFER SERVICING TO QUALIFIED SERVICE PERSONNEL.

This symbol warns the user that uninsulated voltage within the unit may have sufficient magnitude to cause electric shock. Therefore, it is dangerous to make any kind of contact with any inside part of this unit.

This symbol alerts the user that important literature concerning the operation and maintenance of this has been included. Therefore, it should be read carefully in order to avoid any problems.

IMPORTANT SAFETY NOTICE

There are special components used in this equipment which are important for safety. These parts are indicated by the "⚠" mark on the schematic diagram and the replacement parts list. It is essential that these critical parts should be replaced with manufacturer's specified parts to prevent X-radiation, shock, fire, or other hazards. Do not modify the original design without permission of manufacture.

Warning
The lithium battery in this equipment must only be replaced by qualified personnel. When necessary, contact your local Panasonic supplier.

CAUTION
Danger of explosion if battery is incorrectly replaced.
Replace only with the same or equivalent type recommended by the equipment manufacturer. Discard used batteries according to manufacturer's instructions.

STANDARD ACCESSORIES

AC Power Cord	2 pcs.
Rack Mounting Bracket	2 pcs.
Screw for Rack Mounting Bracket (M4x10)	4 pcs.
Absorber	4 pcs.
Sleeve	4 pcs.
Earth Lug	1 pc.
Hard Disk Fixing Screw	4 pcs.

CONTENTS

Major Operating Controls and Their Functions . . . 1
DIP Switch Setting of SCSI-IDE Board . . . 5
Adjustment Procedure . . . 5
Location of Test Points and Adjusting Controls . . . 11
Wiring Diagram . . . 12
Block Diagram
- Analog Board . . . 13
- Front Board . . . 14
- Main Board (1/10) . . . 15
- Main Board (2/10) . . . 16
- Main Board (3/10) . . . 17
- Main Board (4/10)/(5/10) . . . 18
- Main Board (6/10)/Rear Board . . . 19
- Main Board (7/10) . . . 20
- Main Board (8/10)/(9/10) . . . 21
- Main Board (8/10)/(10/10) . . . 22
- Motion Detector Board . . . 23

Schematic Diagram
- Analog Board . . . 25
- Rear Board . . . 26
- Motion Detector Board (1/2) . . . 28
- Motion Detector Board (2/2) . . . 29
- Main Board (1/10) . . . 31
- Main Board (2/10) . . . 32
- Main Board (3/10) . . . 33
- Main Board (4/10) . . . 34
- Main Board (5/10) . . . 35
- Main Board (6/10) . . . 36
- Main Board (7/10) . . . 37
- Main Board (8/10) . . . 38
- Main Board (9/10) . . . 39
- Main Board (10/10) . . . 40
- Front Board/LED Board . . . 43
- Power Board . . . 44

Conductor View
- Analog Board . . . 24
- Rear Board . . . 27
- Motion Detector Board . . . 30
- Main Board . . . 41
- Front Board/LED Board . . . 42
- Power Board . . . 45

Exploded View . . . 46
Replacement Parts List . . . 47

MAJOR OPERATING CONTROLS AND THEIR FUNCTIONS

■ Front View

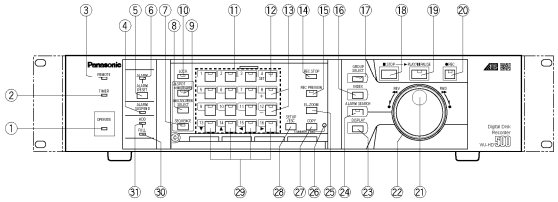

① **Operate Indicator (OPERATE)**
This indicator is on when the power of the WJ-HD500 Digital Disk Recorder is turned on.

② **Timer Indicator (TIMER)**
Lights to indicate when the TIMER is set to INT (internal timer) in the setup menu.

③ **Remote Indicator (REMOTE)**
Lights to indicate when the Disk Recorder is controlled by an outboard device via the Serial or 10/100BASE-T port on the rear of the Disk Recorder.

④ **Alarm Suspend Indicator (ALARM SUSPEND)**
Lights to indicate that the alarm suspension mode is selected.

⑤ **Alarm Reset Button (ALARM RESET)**
This button cancels an activated alarm.
Pressing this button will reset the alarm and return the system to the condition before the alarm function was activated.

⑥ **Alarm Indicator (ALARM)**
This indicator blinks to indicate that an alarm condition exists.
It changes to a steady light when the alarm is reset automatically.
To turn the indicator off, press the ALARM RESET button.

⑦ **Sequence Button (SEQUENCE)**
Runs the assigned sequence on the selected monitor screen for the specified duration.
During the sequence, pressing this button will pause the sequence that is being run on the monitor screen.
The LED indicates the status as follows.

On: Sequence is being run.
Blinking: Sequence is in pause mode.

⑧ **Multiscreen Selection Button (MULTISCREEN SELECT)**
Selects the multiscreen pattern to be displayed on the Multiscreen Monitor that is connected to the MULTI SCREEN OUT on the rear of the Recorder.
Pressing this button will toggle the display on the monitor screen as shown below.

4 → **7** → **9** → **10** → **13** → **16** → **4** screen segments

⑨ **Monitor Selection Button (SPOT / MULTISCREEN)**
Selects to control the display on the screen for either the Spot or Multiscreen Monitor.
Pressing this button will toggle the indicator in the button on and off to indicate the selected monitor as shown below.

On: Indicates the Spot monitor is selected.
Off: Indicates the Multiscreen monitor is selected.

⑩ **Lock Button (LOCK)**
Toggles to enable or disable the button lock function on both front panels of the Disk Recorder and Remote Controller.
The LED indicates the status as shown below.

On: The button lock is enabled.
Off: The button lock is disabled.

While On, the button lock will be released only if the preset password is entered in the password inquiry window.

⑪ **Numeric Buttons (1 - 16)**
These buttons are used for numeric input into the system such as the video selection, password, etc.
The indicator in the button lights up to indicate as shown below.

Green: The input is displayed on the monitor.
Yellow: The input is displayed on the monitor and recorded on the Hard Disk.
Orange: The input is recorded on the Hard Disk (no display).

⑫ **Set Button (SET)**
During the setup, this button is used to display a submenu in the setup menu if the item has its own setting menu.

⑬ **Increment /Decrement Button (⊞, ⊟)**
These buttons are used to zoom in and out the zoomed image presently displayed on the Multiscreen Monitor.
During the setup, these buttons are used to select the item parameter in the setup menu.

⑭ **Recording Stop Button (REC STOP)**
Pressing this button will stop the recording.

⑮ **Recording Preview Button (REC PREVIEW)**
Use this button to display the playback image with the live images on the Multiscreen Monitor.
The LED indicates the status as shown below.

On: The selected playback image is displayed
Blinking: Prompts you to select the numeric button for displaying the playback image.

⑯ **Index Button (INDEX)**
Displays the all record list (list and thumbnail) or alarm and emergency list depending on the status of the ALARM SEARCH button.

⑰ **Group Selection Button (GROUP SELECT)**
Selects the camera group from among group 1, 2, 3 and 4.
The LED will light while any of the groups is selected.

⑱ **Stop Button (STOP)**
Pressing this button will stop the playback.

⑲ **Playback / Pause Button (PLAY/PAUSE)**
Pressing this button will start the playback.
During playback, pressing this button will pause the playback.
The indicator in the button lights to indicate as shown below.

On: Indicates that the playback mode is selected.
Blinking: Indicates that the pause mode is selected.

⑳ **Record Button (REC)**
Pressing this button will start the recording manually when the Timer parameter is set to OFF in the setup menu.
The indicator in the button lights up to indicate that the recording mode is selected.

㉑ **JogDial**
Rotate in paused playback to move forward or backward to the next recorded image.
It is also used to select the recording number when the recorded list is displayed on the monitor.

㉒ **Shuttle Ring**
Rotate in playback or paused playback to search the recorded images forward or backward at variable speed.

㉓ **Display Button (DISPLAY)**
Pressing this button will display the recording list with the search editing area to find the record to be played back.

㉔ **Alarm Search Button (ALARM SEARCH)**
Selects either the list of alarm and emergency recordings or all recordings to be displayed on the Multiscreen Monitor.
The LED indicates the status of selection as shown below.

On: Search records for alarm and emergency recordings.
Off: Search records for all recordings.

㉕ **Electronic Zoom Button (EL-ZOOM)**
This button is used to zoom an image presently displayed in a single spot on the Multiscreen Monitor.

㉖ **Summer Time Button (SUMMER TIME)**
The SUMMER TIME button is recessed inside the front panel opening. Pressing this button will shift the internal clock to the summer time or vice versa.

㉗ **Copy Button (COPY)**
Copies the selected images on to the DVD-RAM disk when the system is equipped the DVD-RAM Drive unit.

㉘ **Setup / Escape Button (SETUP/ESC)**
This button is used in the Disk Recorder's Setup operation. Pressing this button for two seconds or more will open the Disk Recorder's Setup menu on the screen of the Multiscreen Monitor. During the setup, press this button to return to the previous setup menu.

㉙ **Direction Buttons (▼▲◄ ►)**
These buttons are used to select an area for a zoomed image displayed on the Multiscreen Monitor.
During the setup, these buttons are used to move the cursor position in the setup menu of the Disk Recorder.

▼: Downward
▲: Upward
◄: Left
►: Right

㉚ **Full Indicator (FULL)**
Lights to indicate when the available recording space of the Disk Recorder (HDD) is running low.

㉛ **Hard Disk Drive Indicator (HDD)**
Lights to indicate when the Hard Disk is activated.

■ Rear View

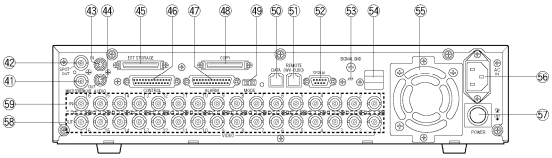

㊶ **Multiscreen Output Connector (MULTI SCREEN OUT)**
The video output signal for the Multiscreen Monitor is provided via this connector.
It can be displayed as the video input in a multiscreen mode (4, 7, 9, 10, 13,16 screen segments).
It also displays the Recorder's playback images.
Pressing the SETUP/ESC button for two seconds or more will automatically select the Multiscreen Monitor and display the Disk Recorder's Setup menu.

㊷ **Spot Output Connector (SPOT OUT)**
The video output signal for the Spot Monitor is provided via this connector.
Displaying the Disk Recorder's playback is disabled.

㊸ **Audio Input Connector (AUDIO IN)**
For audio input from an external device, if applicable.

㊹ **Audio Output Connector (AUDIO OUT)**
For audio output to an external device, if applicable.

㊺ **Extension Storage Port (EXT STORAGE)**
For connecting the optional Extension Unit.

㊻ **Control Port (CONTROL)**
The port has the functions listed below. Make connections to these pins as needed for operating your system.

The pin assignment of the port is shown below.

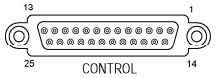

Pin No.	Designation	Pin No.	Designation
1	Group Recording Output	14	Disk Recorder Error Output
2	Manual Recording Output	15	Ground
3	Emergency Recording Output	16	Ground
4	Sequence Timing Output	17	Power Failure Detect Input
5	DVD Remain Space Output	18	Power Failure Proceeding Output
6	HDD Remain Space Output	19	Power Failure Process Completion Output
7	Thermal Error Input (Extension 1)	20	Ground
8	Thermal Error Input (Extension 2)	21	Emergency Recording Input
9	Thermal Error Input (Extension 3)	22	Time Adjustment Output
10	Thermal Error Input (Extension 4)	23	Daylight Savings Select
11	Thermal Error Input (Extension 5)	24	Time Adjustment Input
12	Thermal Error Input (Extension 6)	25	Ground
13	Thermal Error Input (DVD Unit)		

㊼ **Alarm Port (ALARM)**
This port accepts the alarm input from the associated alarm sensors through either Normally Open or Normally Closed contacts.
The pin assignment of the port is shown below.

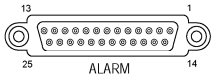

Pin No.	Designation	Pin No.	Designation
1	Alarm Input 1	14	Ground
2	Alarm Input 2	15	Alarm Input 5
3	Alarm Input 3	16	Alarm Input 6
4	Alarm Input 4	17	Alarm Input 7
5	Sequence Timing Input	18	Alarm Input 8
6	Alarm Reset Output	19	Alarm Input 9
7	Ground	20	Ground
8	Alarm Recover Input	21	+5 V Output
9	Alarm Output	22	Recording Timer Select Input
10	Alarm Input 10	23	Alarm Input 14
11	Alarm Input 11	24	Alarm Input 15
12	Alarm Input 12	25	Alarm Input 16
13	Alarm Input 13		

㊽ **Copy Port (COPY)**
For connecting the optional DVD-RAM Drive unit.

㊾ **Mode Selector (MODE)**
Selects data termination for PS Data system expansion.

㊿ **Data Port (DATA)**
Exchanges control data with the external device with PS Data (Panasonic Security Data) mode.

(51) **Remote Port [REMOTE (WV-CU50E)]**
This port is provided for controlling the Disk Recorder with the optional WV-CU50E Remote Controller.
To connect to the controller, use a 6-conductor modular cable supplied as an accessory with the controller.

(52) **Serial Port (SERIAL)**
For connecting a Personal Computer.

(53) **Signal Ground Terminal (SIGNAL GND)**

(54) **10/100BASE-T Port (Optional)**
An optional Network Board can be installed in the Disk Recorder.
This port is used to exchange control data with Ethernet via an Ethernet Hub.

(55) **Cooling Fan**
Prevents the temperature of the Recorder from rising,
Do not block the ventilation opening on the cover.

(56) **AC Inlet Socket (AC IN)**
Plug the power cord (supplied as a standard accessory) into this socket and connect it to an AC outlet.

(57) **Power Switch (POWER ON/OFF)**
This switch turns the power of the Disk Recorder on and off.

(58) **Video Output Connectors (VIDEO OUT 1 - 16)**
The video signal connected to the Video Input Connector (VIDEO IN) is looped through these connectors with an automatic 75 Ω termination.

(59) **Video Input Connectors (VIDEO IN 1 - 16)**
These connectors accept either a colour or B/W composite video signal from the camera.

DIP SWITCH SETTING OF SCSI-IDE BOARD

- When replacing the SCSI-IDE Board, confirm that the #2, #3 and #8 of Dip Switch (SW1) on the SCSI-IDE Board are set to ON position as shown in Fig. 1.

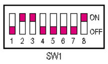

Fig. 1

ADJUSTMENT PROCEDURE

1. Test Equipments Required

- The following Test Equipments are required for adjustment of the Digital Disk Recorder WJ-HD500.
- Digital Voltmeter
- Frequency Counter
- Waveform Monitor
- Oscilloscope
- Underscanned Colour Video Monitor
- Video Signal Generator (Colour Bar Signal)
- Ceramic Screwdriver
- Extension Cable Ⓐ (Part No. : V0EA1311AN) as shown in Fig. 1-1.

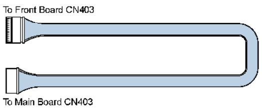

Fig 1-1

- Extension Cable Ⓑ (Part No. : V0JA0010AN) as shown in Fig. 1-2.

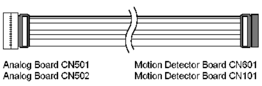

Fig 1-2

2. Disassembling Procedure for Adjustment

- Referring to Fig. 2-1, remove eleven screws that secure the Top Cover and remove the Top Cover.

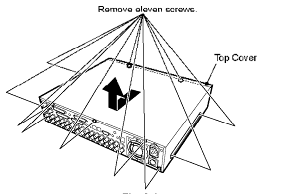

Fig. 2-1

- Referring to Fig. 2-2, remove six screws that secure the Main Board and disconnect CN403 on the Main Board.

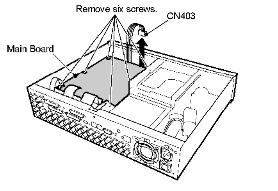

Fig. 2-2

- Referring to Fig. 2-3, turn over the Main Board with the front side up.

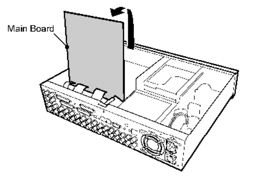

Fig 2-3

- Referring to Fig. 2-4, remove three screws that secure the Motion Detector Board and remove the Motion Detector Board.

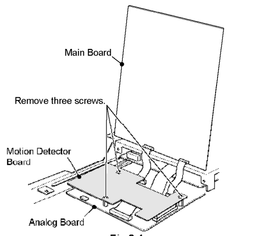

Fig 2-4

- Connect the Extension Cable Ⓐ between CN403 on the Main Board and CN403 on the Front Board.
- Connect the Extension Cable Ⓑ between CN501 on the Analog Board and CN601 on the Motion Detector Board.
- Connect the Extension Cable Ⓑ between CN502 on the Analog Board and CN101 on the Motion Detector Board.

3. Connection and Setting Up for Adjustment

3.1. Connection

- Fig. 3-1 shows the connecting diagram for adjustment of the WJ-HD500.

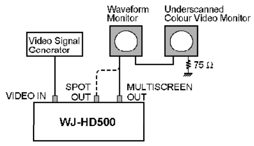

Fig 3-1

- Connect the Underscanned Colour Video Monitor through the Waveform Monitor to the Multiscreen Output Connector or Spot Output Connector on the Rear Panel of the WJ-HD500.
- Terminate the input terminal of the Underscanned Colour Video Monitor with 75 Ω.
- Connect the Video Signal Generator to the Video Input Connector on the Rear Panel of the WJ-HD500.
- Connect the probe of the Oscilloscope, the Frequency Counter and the Digital Voltmeter at the desired Test Point in each adjustment step.

3.2. Setting Up

- Turn on the power.
- Press the Setup/Escape Button (**SET UP/ESC**) for two seconds or more, and the **WJ-HD500 SETUP** menu as shown in Fig. 3-2 will appear on the monitor screen.

```
WJ-HD500 SETUP                          *.**

TIMER     OFF
REC SETUP
  COMMON SETUP
  *MANUAL       WITHOUT AUDIO
  *TIMER        WITHOUT AUDIO
  *EMERGENCY    WITHOUT AUDIO
MULTIPLEXER SETUP
ALARM SETUP
DISPLAY SETUP
COMMUNICATION SETUP
SYSTEM SETUP
DVD FORMAT
LANGUAGE→                           ENGLISH
```

Fig 3-2

- Move the cursor to **SYSTEM SETUP** by pressing the Direction Buttons (▲ or ▼), then press the Set Button (**SET**). The **SYSTEM SETUP** menu as shown in Fig. 3-3 will appear on the monitor screen.

```
9 SYSTEM SETUP

CLOCK→  JAN 1.00  0:00
TIME ADJUSTING            OFF
  SET TIME→                0:00
AUTO KEY LOCK             OFF
PASSWORD ALL→             *****
         OPERATION→       *****
BUZZER          -         ON
USER DEFINED SETUP        *LOAD

DISK MANAGEMENT

ERROR REPORT
SYSTEM INFORMATION
```

Fig 3-3

- Move the cursor to **USER DEFINED SETUP** by pressing the Direction Buttons (▲ or ▼).
- Select **SAVE** by pressing the Increment/Decrement Buttons (+ or –), then press the Set Button (**SET**). The **USER DEFINED SETUP** menu as shown in Fig. 3-4 will appear on the monitor screen.


```
9-2 USER DEFINED SETUP

SAVE USER DEFINED SETUP

 YES  NO




[SET]:EXECUTE
```

Fig 3-4

- Select **YES** by pressing the Direction Buttons (◄ or ►), then press the Set Button (**SET**) to save the current setting conditions.
- When the saving is completed, press the Setup/Escape Button (**SET UP/ESC**) then the display will return to the **SYSTEM SETUP** menu as shown in Fig. 3-3.
- Press the Setup/Escape Button (**SET UP/ESC**) to return to the **WJ-HD500 SETUP** menu as shown in Fig. 3-5.

```
WJ-HD500 SETUP                    1.00

TIMER     INT
REC SETUP
  COMMON SETUP
  *MANUAL       WITH AUDIO
  *TIMER        WITH AUDIO
  *EMERGENCY    WITH AUDIO
MULTIPLEXER SETUP
ALARM SETUP
DISPLAY SETUP
COMMUNICATION SETUP
SYSTEM SETUP
DVD FORMAT
```

Fig 3-5

- Move the cursor to **TIMER** by pressing the Direction Buttons (▲ or ▼).
- Select **INT** by pressing the Increment/Decrement Buttons (+ or –) as shown in Fig. 3-5.
- Move the cursor to **REC SETUP/COMMON SETUP** by pressing the Direction Buttons (▲ or ▼), then press the Set Button (**SET**).
- The **COMMON REC SETUP** menu as shown in Fig. 3-6 will appear on the monitor screen.

```
1 COMMON REC SETUP

REC QUALITY
  FIELD/FRAME     FIELD
  COLOR MODE      COLOR STD

GROUP SETUP
  CAMERA ASSIGNMENT
  TITLE
TITLE EMBEDDED   OFF
TIME EMBEDDED    OFF
THUMBNAIL        8
PLAYBACK MODE    ALL
HDD DISKEND      STOP
```

Fig 3-6

- Move the cursor to **CAMERA ASSIGNMENT** by pressing the Direction Buttons (▲ or ▼), then press the Set Button (**SET**). The **GROUP SETUP (CAMERA ASSIGNMENT)** menu as shown in Fig. 3-7 will appear on the monitor screen.

```
1-1 GROUP SETUP(CAMERA ASSIGNMENT)

CAM GROUP   CAM GROUP
 1   1       9   4
 2   4      10   4
 3   4      11   4
 4   4      12   4
 5   4      13   4
 6   4      14   4
 7   4      15   4
 8   4      16   4
```

Fig 3-7

- Move the cursor to the Group editing area for the **CAM 1** by pressing the Direction Buttons (▲ or ▼).
- Set the Group Number to **1** by pressing the Increment/Decrement Buttons (+ or –) as shown in Fig. 3-7.
- Set the Group Number of the rest of Cameras to the number other than **1** by the same procedure as above.
- Press the Setup/Escape Button (**SET UP/ESC**) twice to return to the **WJ-HD500 SETUP** menu as shown in Fig. 3-5.
- Move the cursor to **REC SETUP/TIMER** by pressing the Direction Buttons (▲ or ▼).
- Select **WITHOUT AUDIO** by pressing the Increment/Decrement Buttons (+ or –), then press the Set Button (**SET**). The **TIMER REC SETUP** menu as shown in Fig. 3-8 will appear on the monitor screen.

```
3 TIMER REC SETUP(WITHOUT AUDIO)

            PROGRAM
SUNDAY        ---
MONDAY        ---
TUESDAY       ---
WEDNESDAY     ---
THURSDAY      ---
FRIDAY        ---
SATURDAY      ---
DAILY        PROG1

TIMER SPECIAL DAY

EXT REC MODE PROG1
```

Fig 3-8

- Move the cursor to the Program editing area of **SUNDAY** in the menu by pressing the Direction Buttons (▲ or ▼).
- Set the Program Timer to --- (OFF) by pressing the Increment/Decrement Buttons (+ or –) as shown in Fig. 3-8.
- Set the Program Timer of **MONDAY** - **SATURDAY** to --- (OFF) by the same procedure as above.
- Move the cursor to the Program editing area of **DAILY** in the menu by pressing the Direction Buttons (▲ or ▼).

- Set the Program Timer to **PROG1** by pressing the Increment/Decrement Buttons (+ or –) as shown in Fig. 3-8.
- Press the Set Button (**SET**), and the **PROG1** setting menu as shown in Fig. 3-9 will appear on the monitor screen.

```
3-1 PROG1(WITHOUT AUDIO)

NO START  END    G1    G2    G3    G4
 1 0:00→24:00  M/S    -     -     -
          RATE  7.5   7.5    1    10
 2 -:--→-:--   M/S    -    O/S   O/S
          RATE  10          5     1
 3 -:--→-:--   M/S   M/S   M/S   M/S
          RATE  5     2     2     5
 4 -:--→-:--   O/S   M/S    -    M/S
          RATE  15    10          10

 SET TOTAL REC RATE ON EACH TABLE
   G1+G2+G3+G4= UNDER 30FPS
```

Fig 3-9

- Move the cursor to the **START** time editing area of **NO.1** by the Direction Buttons (◄, ►, ▲ or ▼).
- Set the time to start the recording to **0:00** by the Increment/Decrement Buttons (+ or –) as shown in Fig. 3-9.
- Move the cursor to the END time editing area of NO.1 by the Direction Buttons (◄ or ►).
- Set the time to end the recording to **24:00** by the Increment/Decrement Buttons (+ or –) as shown in Fig 3-9.
- Move the cursor to the Recording Mode editing area for Group 2 (**G2**) by pressing the Direction Buttons (◄ or ►).
- Set the Recording Mode to – (disable) by pressing the Increment/Decrement Buttons (+ or –) as shown in Fig. 3-9.
- Set the Recording Mode of Group 3 (**G3**) and Group 4 (**G4**) to – (disable) by the same procedure as above.
- Move the cursor to the Recording Mode editing area for Group 1 (**G1**) by pressing the Direction Buttons (◄ or ►).
- Set the Recording Mode to **M/S** by pressing the Increment/Decrement Buttons (+ or –) as shown in Fig. 3-9.
- Press the Set Button (**SET**), and the **M/S** setting menu as shown in Fig. 3-10 will appear on the monitor screen.

```
3-1-1-1 PROG1-NO1-G1 REC SETUP

M/S(EVENT RECORDER  MULTI SHOT)

  REC MODE
    REC RATE             15FPS
    QUALITY              SUPER FINE
  PRE PICTURES           15
  POST PICTURES          60
  DYNAMIC REC            OFF
```

Fig 3-10

- Move the cursor to the **REC RATE** in the menu by pressing the Direction Buttons (▲ or ▼).
- Set the Recording Rate to **15FPS** by pressing the Increment/Decrement Buttons (+ or –) as shown in Fig. 3-10.
- Move the cursor to the **PRE PICTURES** by pressing the Direction Buttons (▲ or ▼).
- Set the number of the pre-recording image to the value other than **0** by pressing the Increment/Decrement Buttons (+ or –) as shown in Fig. 3-10.
- Press the Setup /Escape Button (**SET UP/ESC**) three times to return to the **WJ-HD500 SETUP** menu as shown in Fig. 3-5.
- Move the cursor to **ALARM SETUP** by pressing the Direction Buttons (▲ or ▼), then press the Set Button (**SET**). The **ALARM SETUP** menu as shown in Fig. 3-11 will appear on the monitor screen.

```
6 ALARM SETUP

ALARM TERMINAL SETUP
AUTO RESET                      OFF
ALARM OUTPUT                    2S
ALARM BUZZER                    2S
VIDEO LOSS                      OFF
VIDEO MONITOR DETECTION         OFF
  VMD AREA SETUP

ALARM MODE MULTI OUTPUT         SPOT
           SPOT OUTPUT          SPOT
```

Fig 3-11

- Move the cursor to **VIDEO LOSS** by pressing the Direction Buttons (▲ or ▼).
- Select **OFF** by pressing the Increment/Decrement Buttons (+ or –) as shown in Fig. 3-11.
- Move the cursor to **VIDEO MOTION DETECTION** by pressing the Direction Buttons (▲ or ▼).
- Select **OFF** by pressing the Increment/Decrement Buttons (+ or –) as shown in Fig. 3-11.
- Press the Setup/Escape Button (**SET UP/ESC**) for two seconds or more to close the setup menu and to return to the normal screen.
- Confirm that the Yellow LED of Numeric Button **1** only lights up.

4. Adjustment Procedure

- Refer to the Location of the Test Points and Adjusting Controls on the page 11.

■ Power Board

(1). +5V Adjustment

Test Point:	**TP16 (+5V)**	**Main Board**
Adjust:	**VR2 (+5V)**	**Power Board**

- Turn on the power.
- Connect the Digital Voltmeter to TP16.
- Adjust VR2 to obtain 5.05 ± 0.05 V.

■ Main Board

(2). Real Time Clock Frequency Adjustment

Test Point:	**TP21 (REAL TIME CLK)**	**Main Board**
Adjust:	**CT21 (REAL TIME CLK)**	**Main Board**

- Connect the Frequency Counter to TP21.
- Adjust CT21 to obtain 32768.5 ± 0.03 Hz.

Note: This Adjustment should be done within 2 minutes after turning on the power.

(3). Frame Memory Controller Frequency Adjustment

Test Point:	**TP801 (FRAME MEMORY CLK)**	**Main Board**
Adjust:	**CT801 (FRAME MEMORY CLK)**	**Main Board**

- Connect the Frequency Counter to TP801.
- Adjust CT801 to obtain 27 MHz ± 100 Hz.

(4). Audio PLL Adjustment

Test Point:	**TP802 (PLL)**	**Main Board**
Adjust:	**CT802 (PLL)**	**Main Board**

- Connect the Digital Voltmeter to TP802.
- Adjust CT802 to obtain 1.65 ± 0.1 V.

(5). Multiscreen Output Level Adjustment

Test Point:	**Multiscreen Output Connector**	**Rear Panel**
Adjust:	**VR751 (MULTI OUT)**	**Main Board**

- Connect the terminated Oscilloscope with 75Ω to the Multiscreen Output Connector.
- Adjust VR751 so that the H-Sync Level becomes 300 ± 15 mV as shown in Fig. 4-1.

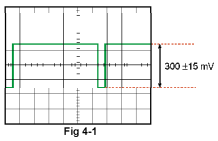

Fig 4-1

(6). Record Output Level Adjustment

Test Point:	**Spot Output Connector**	**Rear Panel**
Adjust:	**VR701 (REC OUT)**	**Main Board**

- Supply the Colour Bar signal to the Video Input Connector 1.
- Set the position of the SW11 on the Main Board to **SUB** side.
- Connect the terminated Oscilloscope with 75 Ω to Spot Output Connector.
- Adjust VR701 so that the H-Sync Level becomes 300 ± 15 mV as shown in Fig. 4-1.

(7). Decoder Clamp Level Adjustment

Test Point:	**TP601 (CLAMP-1)**	**Main Board**
	TP602 (CLAMP-2)	**Main Board**
	TP603 (CLAMP-3)	**Main Board**
Adjust:	**VR551 (CLAMP-1)**	**Main Board**
	VR601 (CLAMP-2)	**Main Board**
	VR651 (CLAMP-3)	**Main Board**

- Connect the Digital Voltmeter to TP601.
- Adjust VR551 to obtain 0.60 ± 0.02 V.
- Change the connection of the Digital Voltmeter to TP602.
- Adjust VR601 to obtain 0.60 ± 0.02 V.
- Change the connection of the Digital Voltmeter to TP603.
- Adjust VR651 to obtain 0.60 ± 0.02 V.

■ Analog Board

(0). Decoder 1 and 2 Input Level Adjustment

Test Point:	**Spot Output Connector**	**Rear Panel**
Adjust:	**VR611 (DECODER-1)**	**Analog Board**
	VR621 (DECODER-2)	**Analog Board**

- Supply the Stairstep signal (5 Steps, Chroma off) to the Video Input Connector 1.
- Confirm the Position of SW11 on Main Board is **SUB** side.
- Connect the terminated Oscilloscope with 75Ω to the Spot Output Connector.

- Adjust VR611 and VR621 so that the 700 mV portion of the Stairstep signals becomes 700 ± 15 mV as shown in Fig. 4-2.

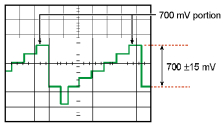

Fig 4-2

(9). Decoder 3 Input Level Adjustment

Test Point:	**Multiscreen Output Connector**	**Rear Panel**
Adjust:	**VR631 (DECODER-3)**	**Analog Board**

- Supply the Stairstep signal (5 Steps, Chroma off) to the Video Input Connector 1.
- Connect the terminated Oscilloscope with 75Ω to the Multiscreen Output Connector.
- Press the Numeric Button 1.
- Adjust VR631 so that the 700 mV portion of the Stairstep signal becomes 700 ± 15 mV as shown in Fig. 4-2.

■ Motion Detector Board

- Set the #5 and #8 of SW23 on the Main Board to ON position as shown in Fig. 4-3.

Fig 4-3

- Turn on the power.

(10). G/L PLL DC Adjustment

Test Point:	**TP601 (G/L PLL DC-1)** **Motion Detector Board**
	TP602 (G/L PLL DC-2) **Motion Detector Board**
Adjust:	**L607 (G/L PLL DC-1)** **Motion Detector Board**
	L608 (G/L PLL DC-2) **Motion Detector Board**

- Supply the Ramp signal to the Video Input Connector 1.
- Connect the Digital Voltmeter to TP601.
- Adjust L607 to obtain 2.5 ± 0.1 V.
- Connect the Digital Voltmeter to TP602.
- Adjust L608 to obtain 2.5 ± 0.1 V.

(11). Pedestal Adjustment

Test Point:	**TP101 (Y-1)**	**Motion Detector Board**
	TP201 (Y-2)	**Motion Detector Board**
Adjust:	**VR101 (Y.PED-1)**	**Motion Detector Board**
	VR201 (Y.PED-2)	**Motion Detector Board**

- Supply the White Raster signal to the Video Input Connector 1.
- Set the #1 of SW601 on the Motion Detector Board to ON position as shown in Fig. 4-4.

Fig 4-4

- Set the Luminance Level of input signal to 0 mV.
- Connect the Digital Voltmeter to TP101.
- Adjust VR101 to obtain 0.7 ± 0.1 V.
- Connect the Digital Voltmeter to TP201.
- Adjust VR201 to obtain 0.7 ± 0.1 V.

(12). Y Level Adjustment

Test Point:	**TP101 (Y-1)**	**Motion Detector Board**
	TP201 (Y-2)	**Motion Detector Board**
Adjust:	**VR102 (Y.GAIN-1)**	**Motion Detector Board**
	VR202 (Y.GAIN-2)	**Motion Detector Board**

- Supply the White Raster signal to the Video Input Connector 1.
- Set the Luminance Level of input signal to 700 mV.
- Connect the Digital Voltmeter to TP101.
- Adjust VR102 to obtain 2.4 ± 0.2 V.
- Connect the Digital Voltmeter to TP201.
- Adjust VR202 to obtain 2.47 ± 0.2 V.

- After completing of the adjustment, set the #1 and #2 of SW601 to OFF position as shown in Fig. 4-5.

Fig 4-5

LOCATION OF TEST POINTS AND ADJUSTING CONTROLS

MAIN BOARD (COMPONENT SIDE)

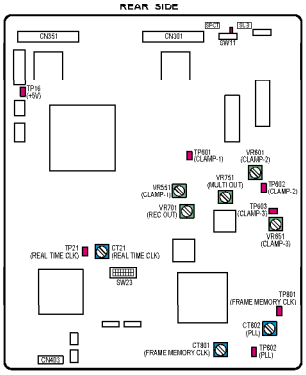

POWER BOARD (COMPONENT SIDE)

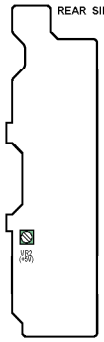

ANALOG BOARD (COMPONENT SIDE)

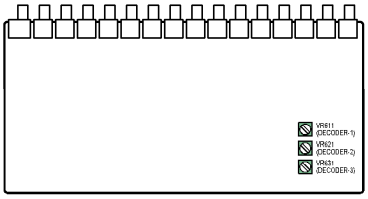

MOTION DETECTOR BOARD (COMPONENT SIDE)

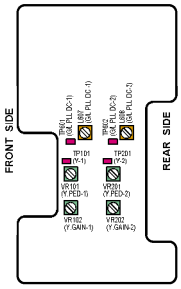

WIRING DIAGRAM

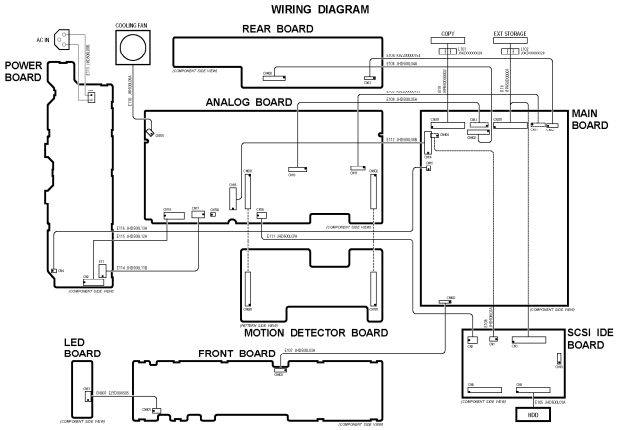

BLOCK DIAGRAM OF ANALOG BOARD

ANALOG BOARD

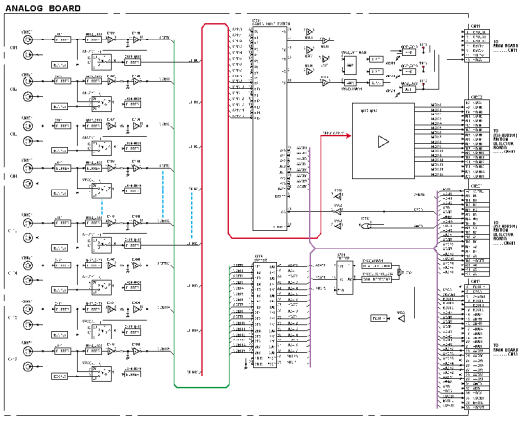

BLOCK DIAGRAM OF FRONT BOARD

FRONT BOARD

LED BOARD

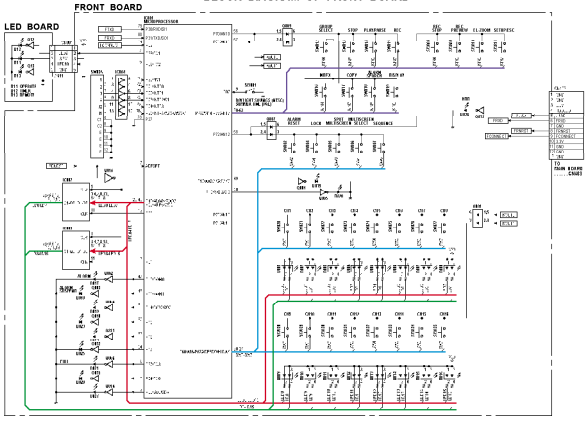

BLOCK DIAGRAM OF MAIN BOARD (1/10)

MAIN BOARD (1/10)

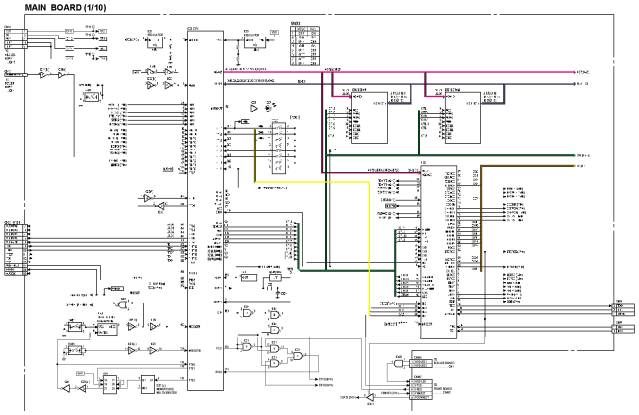

BLOCK DIAGRAM OF MAIN BOARD (2/10)

MAIN BOARD (2/10)

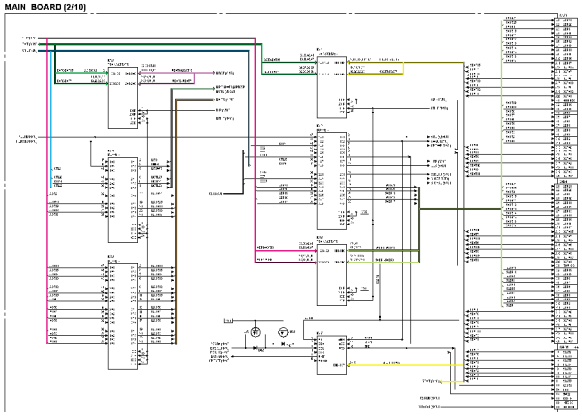

BLOCK DIAGRAM OF MAIN BOARD (3/10)

MAIN BOARD (3/10)

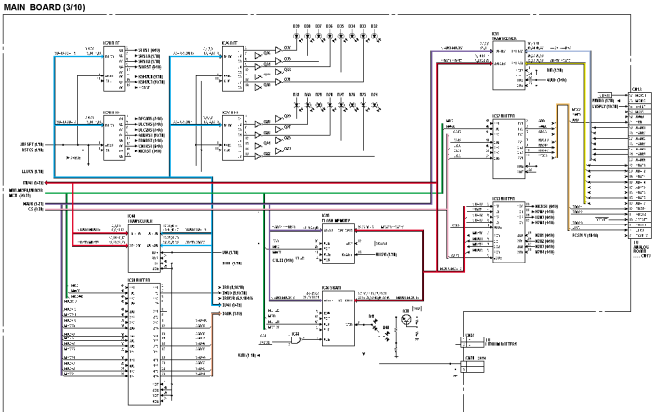

BLOCK DIAGRAM OF MAIN BOARD (4/10)/(5/10)

MAIN BOARD (4/10)/(5/10)

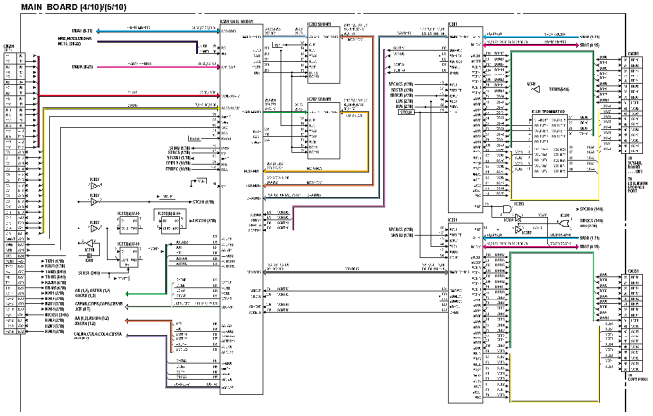

BLOCK DIAGRAM OF MAIN BOARD (6/10) / REAR BOARD

MAIN BOARD (6/10)

REAR BOARD

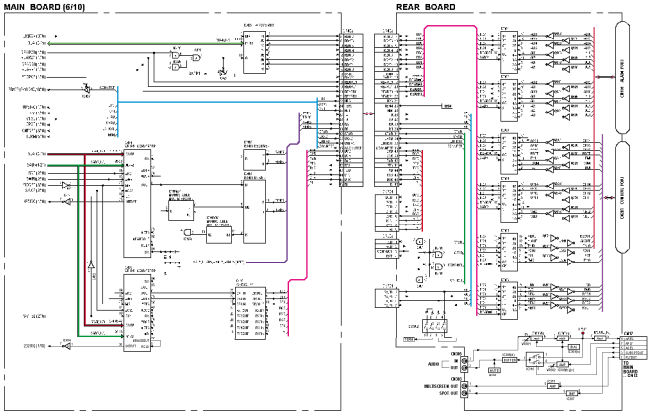

BLOCK DIAGRAM OF MAIN BOARD (7/10)

MAIN BOARD (7/10)

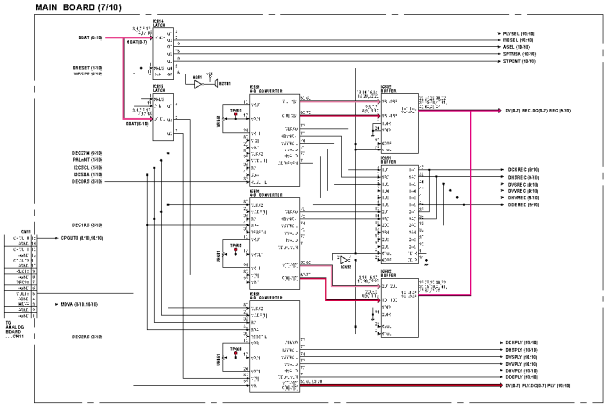

BLOCK DIAGRAM OF MAIN BOARD (8/10)/(9/10)

MAIN BOARD (8/10)/(9/10)

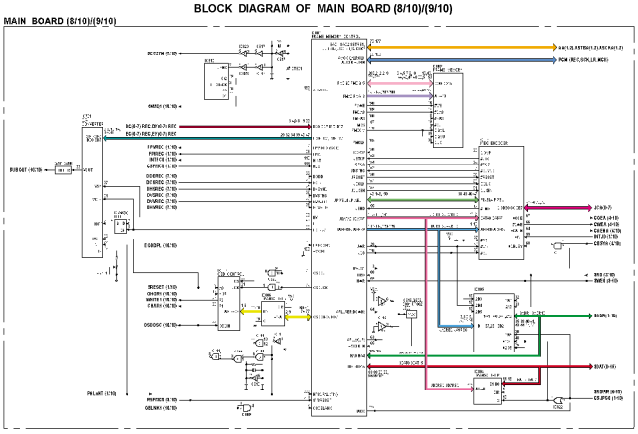

BLOCK DIAGRAM OF MAIN BOARD (8/10)/(10/10)

MAIN BOARD (8/10)/(10/10)

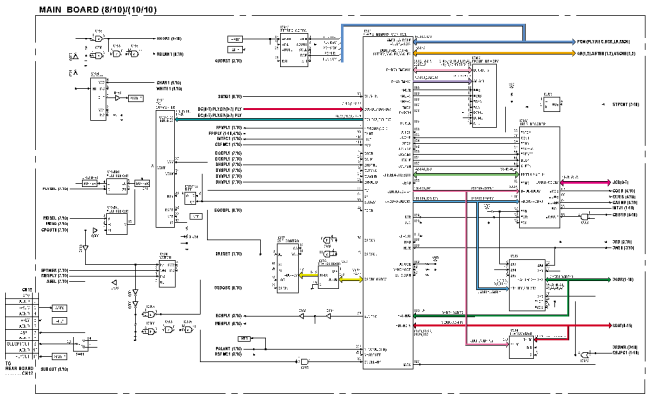

BLOCK DIAGRAM OF MOTION DETECTOR BOARD

MOTION DETECTOR BOARD

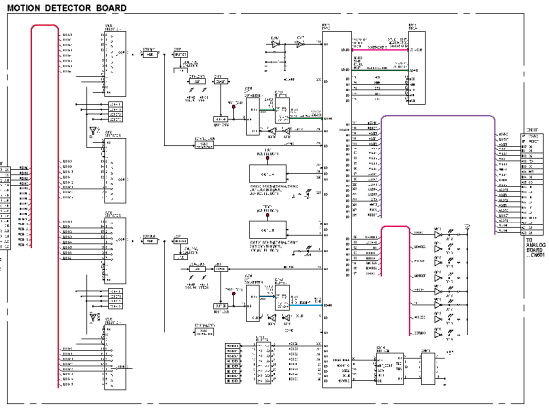

CONDUCTOR VIEW OF ANALOG BOARD

ANALOG BOARD

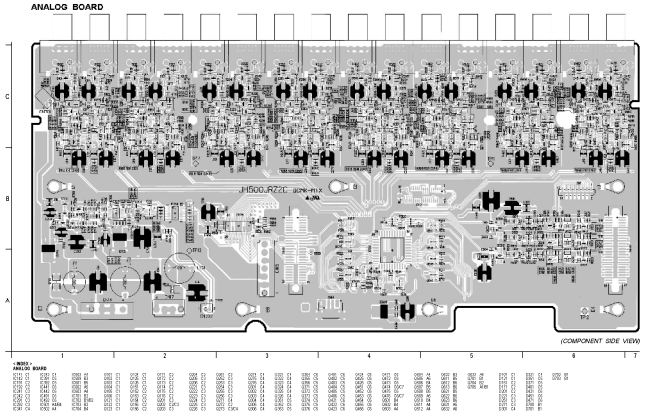

SCHEMATIC DIAGRAM OF ANALOG BOARD

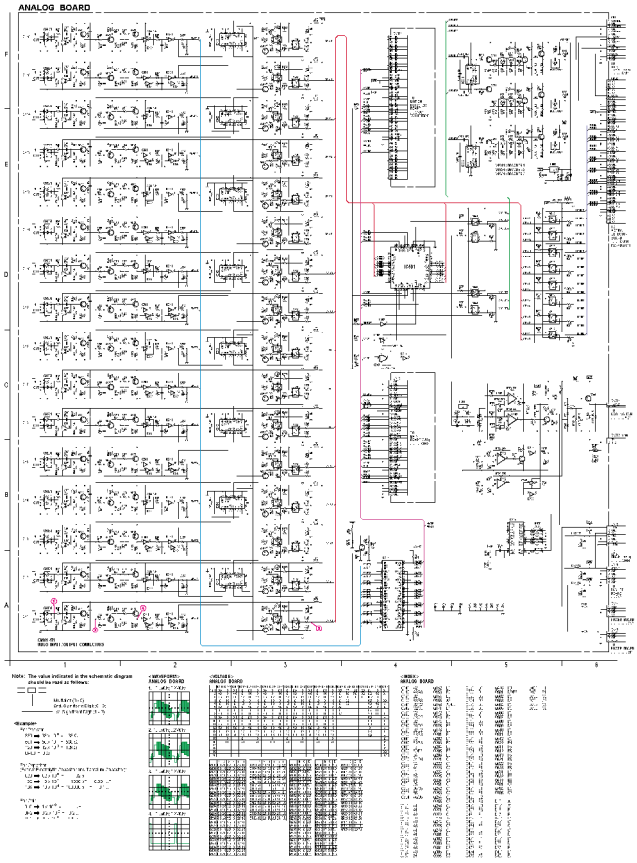

SCHEMATIC DIAGRAM OF REAR BOARD

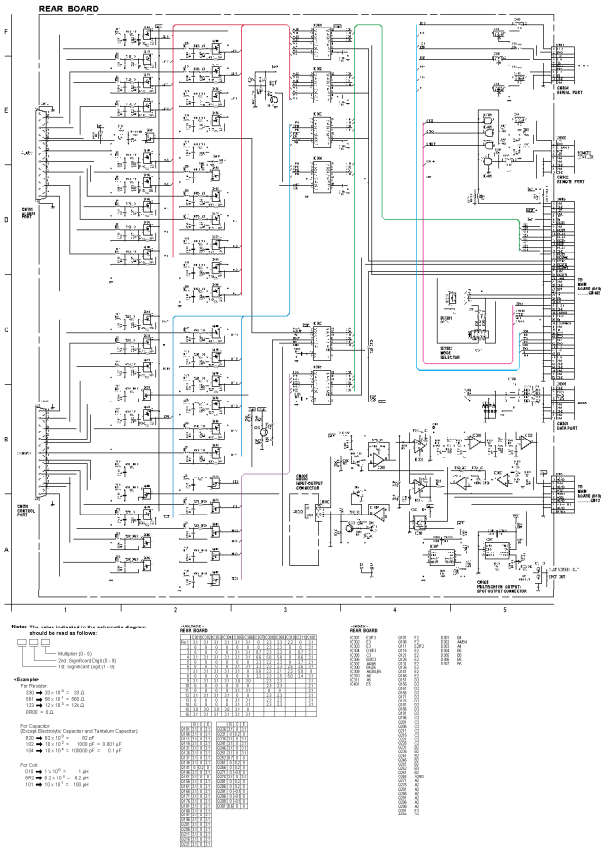

CONDUCTOR VIEW OF REAR BOARD

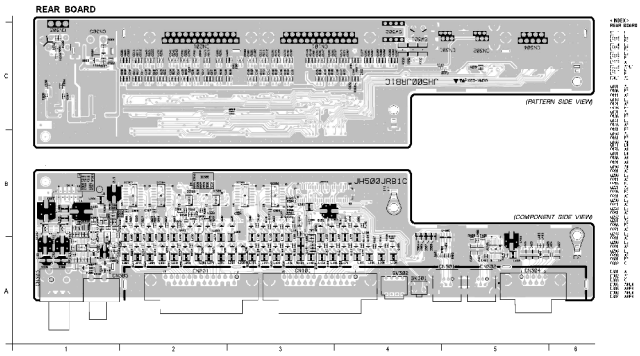

SCHEMATIC DIAGRAM OF MOTION DETECTOR BOARD (1/2)

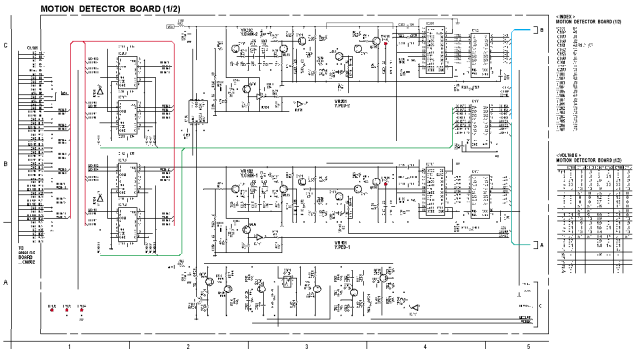

SCHEMATIC DIAGRAM OF MOTION DETECTOR BOARD (2/2)

MOTION DETECTOR BOARD (2/2)

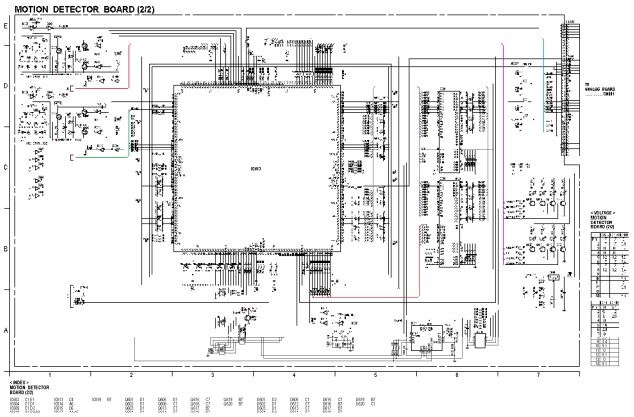

CONDUCTOR VIEW OF MOTION DETECTOR BOARD

MOTION DETECTOR BOARD

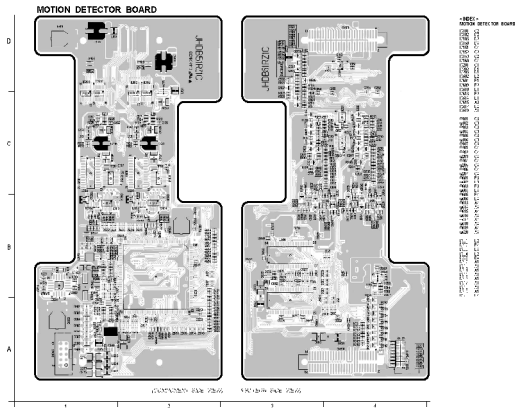

SCHEMATIC DIAGRAM OF MAIN BOARD (1/10)

MAIN BOARD (1/10)

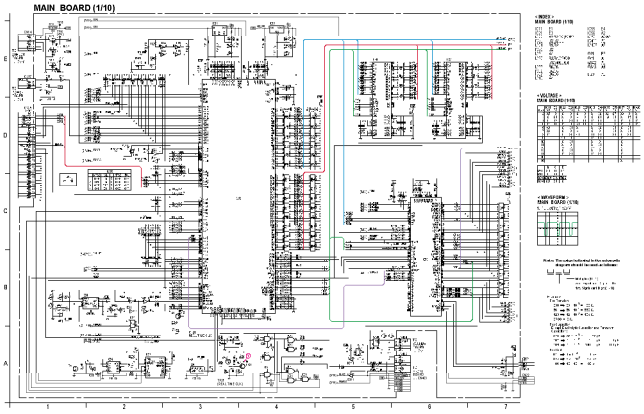

SCHEMATIC DIAGRAM OF MAIN BOARD (2/10)

MAIN BOARD (2/10)

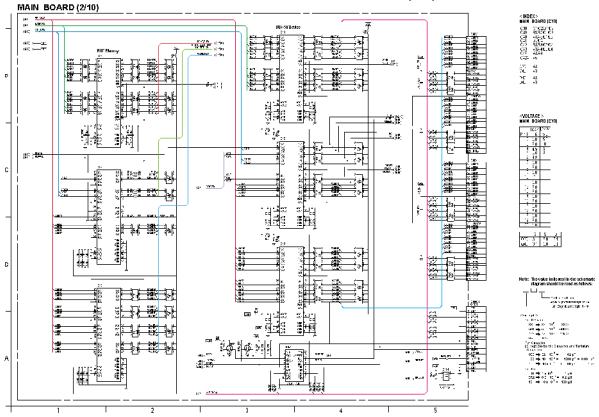

SCHEMATIC DIAGRAM OF MAIN BOARD (3/10)

MAIN BOARD (3/10)

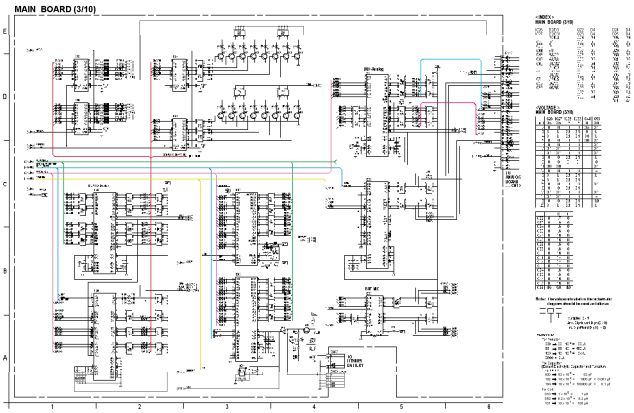

SCHEMATIC DIAGRAM OF MAIN BOARD (4/10)

MAIN BOARD (4/10)

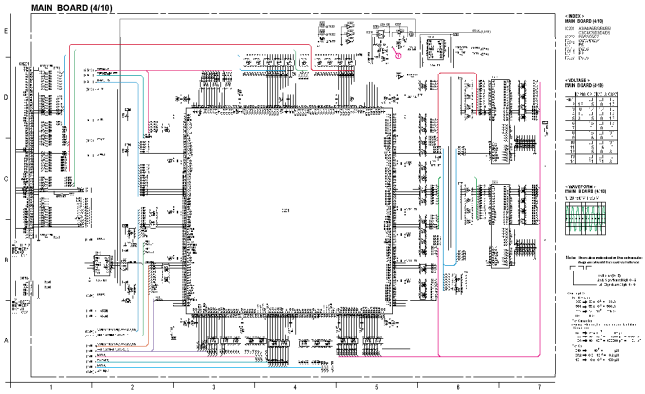

SCHEMATIC DIAGRAM OF MAIN BOARD (5/10)

MAIN BOARD (5/10)

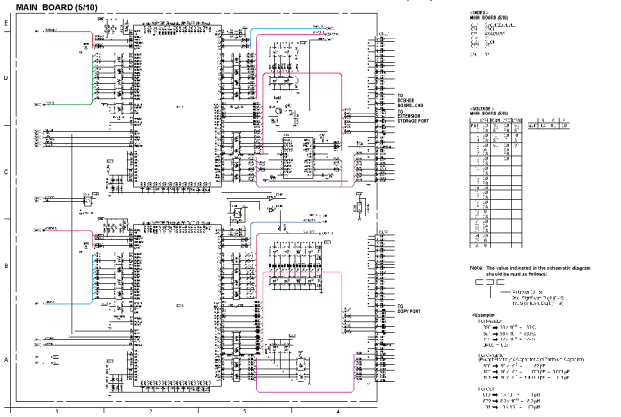

SCHEMATIC DIAGRAM OF MAIN BOARD (6/10)

MAIN BOARD (6/10)

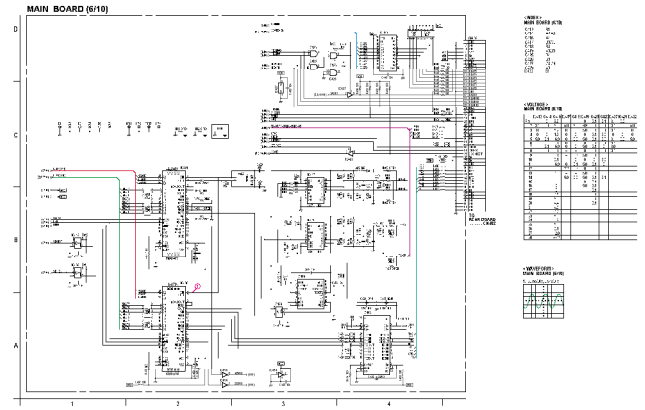

SCHEMATIC DIAGRAM OF MAIN BOARD (7/10)

MAIN BOARD (7/10)

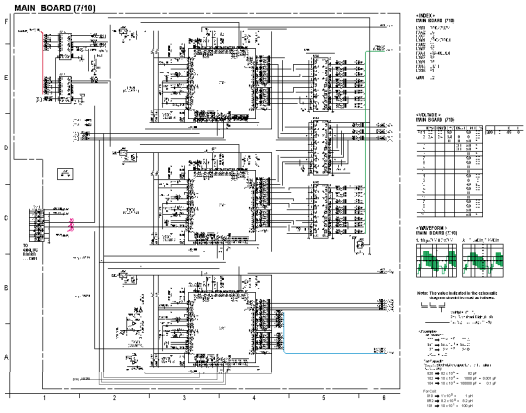

SCHEMATIC DIAGRAM OF MAIN BOARD (8/10)

MAIN BOARD (8/10)

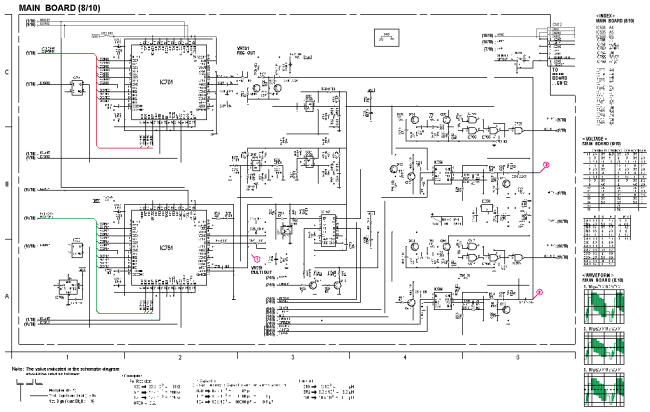

SCHEMATIC DIAGRAM OF MAIN BOARD (9/10)

MAIN BOARD (9/10)

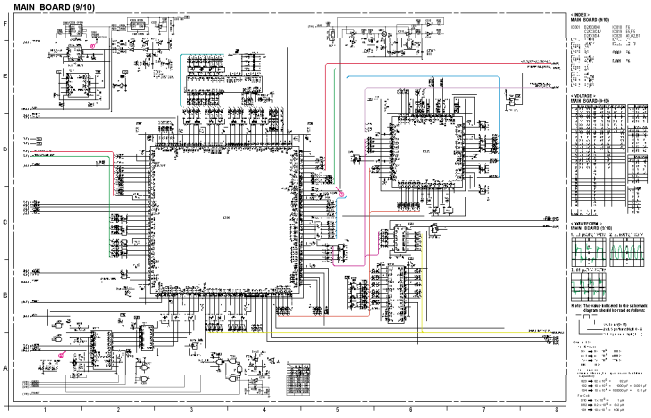

SCHEMATIC DIAGRAM OF MAIN BOARD (10/10)

MAIN BOARD (10/10)

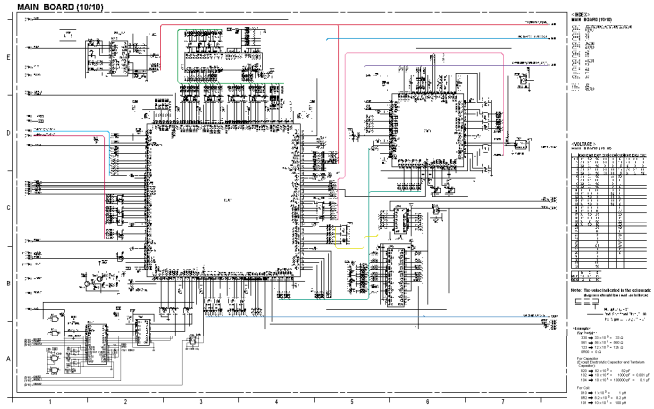

CONDUCTOR VIEW OF MAIN BOARD

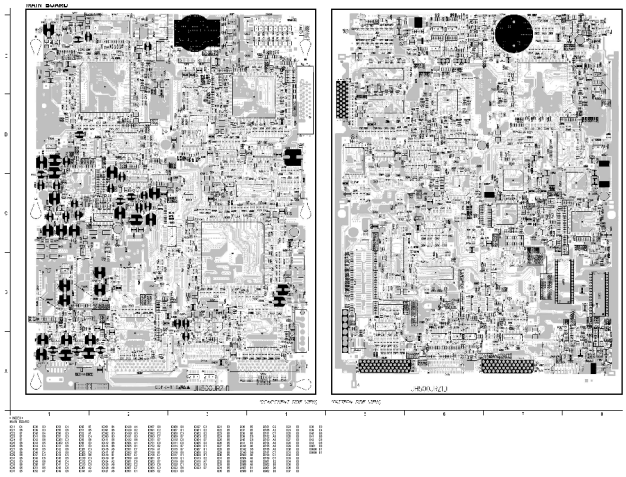

CONDUCTOR VIEW OF FRONT BOARD / LED BOARD

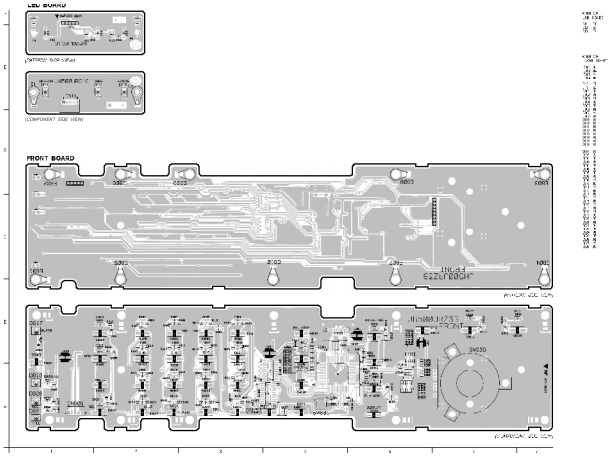

SCHEMATIC DIAGRAM OF FRONT BOARD / LED BOARD

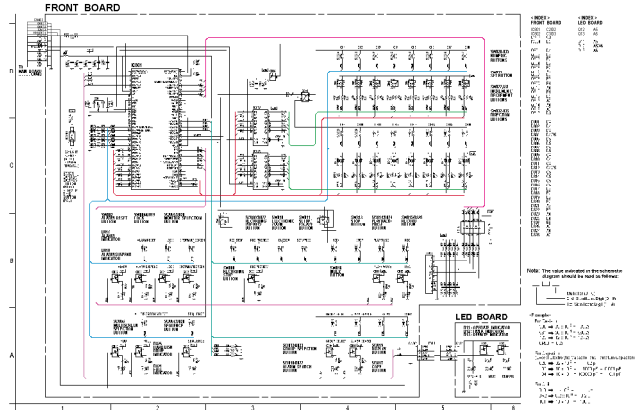

SCHEMATIC DIAGRAM OF POWER BOARD

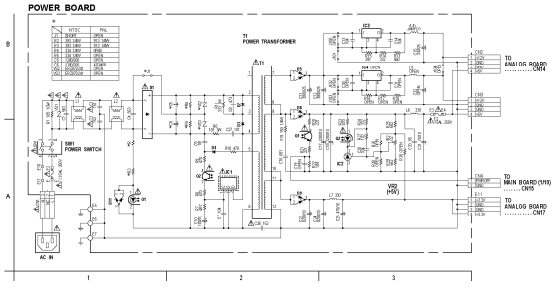

Important safety notice
Components identified by ⚠ mark have special characteristics for safety. When replacing any of these components, use only manufacturer's specified parts.

Note: The value indicated in the schematic diagram should be read as follows:

CONDUCTOR VIEW OF POWER BOARD

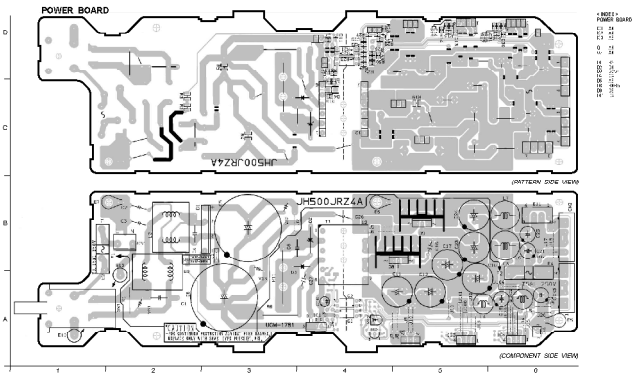

EXPLODED VIEW

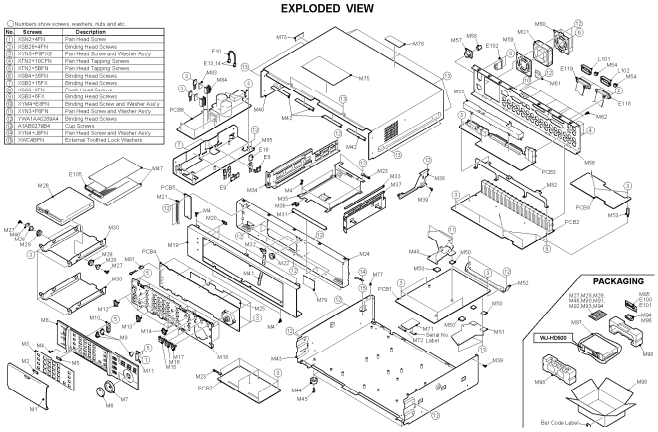

REPLACEMENT PARTS LIST

Important Notice

1. Components identified by " ⚠ " mark have special characteristics important for safety.
   When replacing any of these components, use only manufacturer's specified parts.
2. RTL : Retention Time Limited (No longer available after discontinuing product)

REF. NO.		PART NO.	DESCRIPTION
		MISCELLANEOUS	
L101,102		J0KD00000029	Flat Core
BA11		VL2330-T5S4	Lithum Battery
MO1		YWFBA06A12H	Cooling Fan
E102	⚠	J0HBJM000031	AC Inlet Socket
E103		K9ZZ00000753	Flat Cable for Main Board CN11 and Analog Board CN11
F104		K97700000754	Flat Cable for Main Board CN12 and Rear Board CN12
E105		JHD500L01A	Wire Assy for SCSI-IDE Board CN8 and Hard Desk
E106		JHD500L02A	Wire Assy for Main Board CN404 and SCSI-IDE Board CN1
E107		JHD500L03A	Wire Assy for Main Board CN405 and Front Board CN403
E108		JHD500L04A	Wire Assy for Main Board CN402 and Rear Board CN402
E109		JHD500L05A	Wire Assy for Main Board CN13 and Analog Board CN13
E110		JHD500L06A	Wire Assy for Analog Board CN701 and MO1
E111		JHD500L07A	Wire Assy for Analog Board CN16 and SCSI-IDE Board CN2
E112		JHD500L08B	Wire Assy for Main Board CN14 and Analog Board CN15
E113		JHD500L09B	Wire Assy for Power Board CN1 and E102
E114		JHD500L11B	Wire Assy for Analog Board CN17 and Power Board E11
E115		JHD500L12A	Wire Assy for Analog Board CN14 and Power Board CN2
E116		JHD500L13A	Wire Assy for Main Board CN15 and Power Board CN4
E117		JHD50EL14A	Wire Assy for E102 and Main Chassis
E118		K1PA50D00001	Cable Assy for Main Board CN301, SCSI-IDE Board CN3 and Extension Storage Port
E119		K1PA50D00002	Cable Assy for Main Board CN351 and Copy Port
M1	⚠	V5EA2463A3	Control Panel Lid
M2		V3KA003284	Magnet
M3		V7SC4215A3	Operation Sheet
M4		YWV1AA1074A4	Standard Screw (x10)
M5		V2SA4986A4	Mounting Angle for Magnet
M6	⚠	V5RA1082C3	Jog Dial
M7	⚠	V5RA1081C3	Shuttle Ring
M8	⚠	V5WB2618A1	Control Panel

REF. NO.		PART NO.	DESCRIPTION
M9		29T0J	Gear (x3)
M10		V2SA4985A4	Gear Holding Plate A
M11		V2SA4984A4	Gear Holding Plate B
M12		YWV6JB1156A3	Button
M13		YWV6JA1157A3	Button
M14		YWV6JA1156A3	Button
M15		V6JB1184A3	Stop Button
M16		V6JA1184A3	Playback/Pause Button
M17		V6JC1157A3	Record Button
M18		V2SA4901A1	Mounting Angle for Front Board
M19		V5WB2619A1	Front Panel
M20		YWV1VA0546A3	LED Lens
M21		V2NA1137A3	LED Lens Holder
M22		TB1216	Cord Clamp
M23		YWCS4	Cord Clamp
M24		V2NA1133A1	Front Chassis
M25	⚠	V2PA1277A3	Insulator Sheet
M26		V0EA1320AN	Hard Disk
M27		V1EA1041A4	Hard Disk Fixing Screw (x4)
M28		V1BA0505A4	Sleeve (x4)
M29		V2PA1266A4	Absorber (x4)
M30		V2SA4905A3	Tray Chassis
M31		YWV2HA2167A4	Cushion (x2)
M32		EMT3N	Cord Clamp
M33		V2HB2186A4	Cushion
M34		V2SA4902A2	Sub Chassis A
M35		V2SA4937A3	Reinforcement
M36		YWED51	Cord Clamp
M37		V2SA4903A2	Sub Chassis B
M38		V2SA4923A3	Sub Chassis C
M39		YWE5100EM02	Standard Screw
M40		V5EA2460A1	Top Cover
M41		V2FB1313A4	Spiral Tube
M42		V2HC2167A4	Cushion (x4)
M43		V2KA1340A1	Main Chassis
M44		YWV5LA0067A4	Rubber Foot (x4)
M45		YWA2LA0078A4	Joint (x4)
M46		V4JA1159A4	Earth Lug
M47		V2FB1328A4	Cushion (x2)
M48		V7DA1155A2	Heat Sink
M50	⚠	V2FA1323A4	Cushion (x5)
M51		V7DA1154A3	Heat Sink
M52		V2SA4904A3	Mounting Angle for Main Board
M53		BSB312	Spacer
M54		FRC12CP	Holder for Flat Core
M55		V2SA4899A3	Mounting Angle
M56		V5WB2617A1	Rear Panel
M57		YWA5DB0020A3	Switch Guard
M58		YWA5RG0141A3	Power Switch Knob
M59		YWV2SA2796A4	Mounting Angle for Cooling Fan

REF. NO.		PART NO.	DESCRIPTION
M60		V2SA4898B4	Mounting Angle for Cooling Fan
M61		V5EA2471A4	10/100BASE-T Port Cover
M62		JFS2.6S5JWM	D Sub Screw
M71	⚠	V7QA5608A4	Main Label
M72		V7SA4171A4	PS Data Label
M73		YFV7MB0099A4	Safety Label
M75		V7SA4324A4	Caution Label
M76		V7SA4303A4	Mode Selector Setting Label
M77	⚠	YWA7SA0689A4	Earth Mark Label
M79		V7SA4315B4	Hard Disk Change Label
		MAIN BOARD	
PCB1 (RTL)		JH500EKZ1A	Printed Circuit Board Assy
IC11		C0JBAB000379	IC
IC21		C0DBEZ000011	IC
IC22		C0JBAZ000994	IC
IC23		C0JBAB000384	IC
IC24		C0EBH0000014	IC
IC25		C0JBAF000295	IC
IC26-29		C0JBAF000280	IC
IC31		C0JBAC000158	IC
IC32		C2DBYJ000002	IC
IC33		————	IC
IC36,37		C3ABQG000015	IC
IC38		C0JBAZ000865	IC
IC39,40		C0JBAZ001497	IC
IC41-43		C0JBAZ000785	IC
IC44		C0JBAB000380	IC
IC45		————	IC
IC46		C3BBKG000022	IC
IC47		YWPCF8584T	IC
IC48		C0JBAZ000865	IC
IC49		C0JBAC000158	IC
IC50		C0JBAZ001497	IC
IC51		C0JBAZ000865	IC
IC52		C0JDAZ001497	IC
IC53		C0JBAZ000786	IC
IC55		C0DBEZF00001	IC
IC56		C0JBAE000166	IC
IC57		74HC4538ADTE	IC
IC201		C1AB00001205	IC
IC202,203		C3ABQG000015	IC
IC210		C0JBAB000356	IC
IC212,213		C0JBAF000250	IC
IC301		C1DB00000480	IC
IC341		AN8612NSB-E1	IC
IC351		C1DB00000480	IC

REF. NO.		PART NO.	DESCRIPTION
IC391		C0JBAE000227	IC
IC392		C0JBAZ001492	IC
IC393		C0JBAA000257	IC
IC411		C0JBAZ001492	IC
IC412		C0JBAB000383	IC
IC414		C0JBAB000357	IC
IC416		C1DB00000246	IC
IC417,418		YLTC491CS-TR	IC
IC419		74HC4538ADTE	IC
IC424		C0JBAE000224	IC
IC425		C0JBAZ001502	IC
IC426		C0JBAA000234	IC
IC427		C0JBAZ001492	IC
IC428,429		C0JBAA000257	IC
IC430,431		YWTL16550CPT	IC
IC432		C0JBAB000381	IC
IC504		YWNJM2244M	IC
IC505		C0JBAC000158	IC
IC551		C1AB00001141	IC
IC552		C0JBAZ000865	IC
IC557		YWBA033FPE2	IC
IC558		C0JBAB000381	IC
IC601		C1AB00001141	IC
IC602		C0JBAZ000865	IC
IC607		YWBA033FPE2	IC
IC651		C1AB00001141	IC
IC657		YWBA033FPE2	IC
IC692		C0JBAB000381	IC
IC691		C0JBAZ000865	IC
IC701,751		YWBU1425AK	IC
IC752		C0JBAR000282	IC
IC754		YWNJM2244M	IC
IC755		C0JBAC000158	IC
IC756		C0JBAF000250	IC
IC801		C1AB00001204	IC
IC802		C3ABPG000008	IC
IC803		YWMD36053XT	IC
IC804		C0JBAZ001504	IC
IC805		C0JBAZ000865	IC
IC806		C0JBCZ000257	IC
IC807		C1AA00000582	IC
IC808,809		C0JBAA000257	IC
IC810		C0JBAB000382	IC
IC811		C0JDAC000258	IC
IC814,815		C0JBAF000387	IC
IC816		C9ZB00000332	IC
IC817		C0JBAB000382	IC
IC818		YWTC7W04FUL	IC
IC819		C0JBAZ001492	IC
IC820		C0JBAA000256	IC
IC822		C0JBAE000224	IC
IC823		C0JBAB000357	IC
IC827		C0JBAB000407	IC
IC901		C1AB00001204	IC
IC902		C3ABPG000008	IC

REF. NO.	PART NO.	DESCRIPTION		REF. NO.	PART NO.	DESCRIPTION	
IC903	YWMD36053XT	IC		R60-62	ERJ3GEYJ103V	Metal	10K ohms 1/16W
IC904	C0JBAZ001504	IC		R63-66	ERJ3GEYJ220V	Metal	22 ohms 1/16W
IC905	C0JBAZ000865	IC		R67-74	ERJ3GEYJ103V	Metal	10K ohms 1/16W
IC906	C0JBCZ000257	IC		R75	ERJ3GEYJ513V	Metal	51K ohms 1/16W
IC907	C1AA00000582	IC		R76	ERJ3GEYJ243V	Metal	24K ohms 1/16W
IC908	C0JBAA000257	IC		R77	ERJ3GEYJ101V	Metal	100 ohms 1/16W
IC909	C0JBAA000256	IC		R78-81	ERJ3GEY0R00	Metal	0 ohm 1/16W
IC913	C1AB00001143	IC		R82	D1BB10R00001	Metal	10 ohms 1/16W
IC915	C0JBAA000257	IC		R83-86	ERJ3GEY0R00	Metal	0 ohm 1/16W
IC922	C0JBAE000224	IC		R87	ERJ3GEYJ103V	Metal	10K ohms 1/16W
IC923	YWTC7566EUL	IC		R88-91	ERJ3GEY0R00	Metal	0 ohm 1/16W
Q21	B1ADCF000004	Transistor		R93-98	ERJ3GEY0R00	Metal	0 ohm 1/16W
Q22-37	2SD1819-RSTX	Transistor		R99-101	ERJ3GEYJ222V	Metal	22 ohms 1/16W
Q38	2SC5020-RSTX	Transistor		R102	ERJ3GEYJ330V	Metal	33 ohms 1/16W
Q39,40	2SK122800L	Transistor		R103-105	ERJ3GEYJ220V	Metal	22 ohms 1/16W
Q41	2SD1819-RSTX	Transistor		R106	ERJ3GEYJ330V	Metal	33 ohms 1/16W
Q341	2SB1218-RSTX	Transistor		R107-110	ERJ3GEYJ220V	Metal	22 ohms 1/16W
Q342	2SK122800L	Transistor		R111,112	ERJ3GEYJ103V	Metal	10K ohms 1/16W
Q343	2SD1819-RSTX	Transistor		R113	ERJ3GEYJ104V	Metal	10 ohms 1/16W
Q503	2SB1218-RSTX	Transistor		R114-116	ERJ3GEYJ330V	Metal	33 ohms 1/16W
Q504	2SD1819-RSTX	Transistor		R117,118	ERJ3GEYJ560V	Metal	56 ohms 1/16W
Q505-508	2SB1218-RSTX	Transistor		R119,120	ERJ3GEYJ220V	Metal	22 ohms 1/16W
Q701,706	2SB1218-RSTX	Transistor		R121-126	ERJ3GEYJ103V	Metal	10K ohms 1/16W
Q751	XN0440100L	Transistor		R127-131	ERJ3GEY0R00	Metal	0 ohm 1/16W
Q752	2SD1819-RSTX	Transistor		R132,133	ERJ3GEYJ103V	Metal	10K ohms 1/16W
Q753	2SB1218-RSTX	Transistor		R134-141	ERJ3GEY0R00	Metal	0 ohm 1/16W
Q754	2SD1819-RSTX	Transistor		R142	ERJ3GEYJ221V	Metal	22 ohms 1/16W
Q755,756	2SB1218-RSTX	Transistor		R143,145	ERJ3GEYJ103V	Metal	10K ohms 1/16W
Q801	2SD1819-RSTX	Transistor		R149,150	ERJ3GEYJ103V	Metal	10K ohms 1/16W
Q802	B1CBBF000007	Transistor		R151	YWR0816P301D	Metal	300 ohms 1/16W
Q901	2SD1819-RSTX	Transistor		R152	D1BB36010001	Metal	3.6K ohms 1/16W
Q902	2SB1218-RSTX	Transistor		R153,154	ERJ3GEYJ103V	Metal	10K ohms 1/16W
D23-39	LN1281CTR	LED		R155-157	ERJ3GEYJ220V	Metal	22 ohms 1/16W
D40,41	B0JDAC000001	Diode		R158	D1BB62R00001	Metal	62 ohms 1/16W
D42,43	MA3X152A0L	Diode		R159	YWR0816P121D	Metal	120 ohms 1/16W
D801	YWHVU350TRF	Diode		R160	ERJ3GEYJ102V	Metal	1K ohms 1/16W
D9998,9999	MA178	Diode		R161,162	ERJ3GEY0R00	Metal	0 ohm 1/16W
TH401	ERY32SB050VA	Thermistor		R164-167	ERJ3GEY0R00	Metal	0 ohm 1/16W
R1	ERJ3GEYJ104V	Metal	100K ohms 1/16W	R168	ERJ3GEYJ103V	Metal	10K ohms 1/16W
R2	ERJ3GEY0R00	Metal	0 ohm 1/16W	R169,170	ERJ3GEY0R00	Metal	0 ohm 1/16W
R3	ERJ3GEYJ514	Metal	510K ohms 1/16W	R171	ERJ3GEYJ103V	Metal	10K ohms 1/16W
R4	ERJ3GEYJ103V	Metal	10K ohms 1/16W	R174	D1BB39R00001	Metal	39 ohms 1/16W
R5,21	ERJ3GEY0R00	Metal	0 ohm 1/16W	R175	YWR0816P471D	Metal	470 ohms 1/16W
R22	ERJ3GEYJ102V	Metal	1K ohms 1/16W	R177-181	ERJ3GEYJ220V	Metal	22 ohms 1/16W
R23-25	ERJ3GEYJ103V	Metal	10K ohms 1/16W	R182-184	ERJ3GEYJ103V	Metal	10K ohms 1/16W
R26,27	ERJ3GEY0R00	Metal	0 ohm 1/16W	R185	ERJ3GEYJ220V	Metal	22 ohms 1/16W
R28	ERJ3GEYJ683V	Metal	68K ohms 1/16W	R186	ERJ3GEYJ103V	Metal	10K ohms 1/16W
R29	ERJ3GEY0R00	Metal	0 ohm 1/16W	R187	ERJ3GEYJ220V	Metal	22 ohms 1/16W
R30	D1BB12030001	Metal	120K ohms 1/16W	R188-191	ERJ3GEY0R00	Metal	0 ohm 1/16W
R31	ERJ3GEYJ202V	Metal	2K ohms 1/16W	R193-196	ERJ3GEY0R00	Metal	0 ohm 1/16W
R32-34	ERJ3GEYJ103V	Metal	10K ohms 1/16W	R197,201	ERJ3GEYJ103V	Metal	10K ohms 1/16W
R36-42	ERJ3GEYJ103V	Metal	10K ohms 1/16W	R202	ERJ3GEYJ102V	Metal	1K ohms 1/16W
R44-53	ERJ3GEYJ103V	Metal	10K ohms 1/16W	R205,206	ERJ3GEYJ750V	Metal	75 ohms 1/16W
R54	ERJ3GEYJ102V	Metal	1K ohms 1/16W	R207	ERJ3GEYJ105V	Metal	1M ohms 1/16W
R57,59	ERJ3GEYJ103V	Metal	10K ohms 1/16W	R208	ERJ3GEYJ101V	Metal	100 ohms 1/16W

REF. NO.	PART NO.	DESCRIPTION		REF. NO.	PART NO.	DESCRIPTION	
R211-256	ERJ3GEYJ100V	Metal	10 ohms 1/16W	R473,474	ERJ3GEY0R00	Metal	0 ohm 1/16W
R257-259	ERJ8GEY0R00V	Metal	0 ohm 1/8W	R476	ERJ3GEY0R00	Metal	0 ohm 1/16W
R260	ERJ3GEYJ103V	Metal	10K ohms 1/16W	R478	ERJ3GEYJ103V	Metal	10K ohms 1/16W
R261	ERJ3GEYJ202V	Metal	2K ohms 1/16W	R479,482	ERJ3GEY0R00	Metal	0 ohm 1/16W
R262	ERJ3GEYJ103V	Metal	10K ohms 1/16W	R484	ERJ3GEYJ103V	Metal	10K ohms 1/16W
R263	ERJ3GEYJ332V	Metal	3.3K ohms 1/16W	R485	ERJ3GEY0R00	Metal	0 ohm 1/16W
R264	ERJ3GEYJ223V	Metal	22K ohms 1/16W	R506	ERD52TJ102	Metal	1K ohms 1/4W
R265	ERJ3GEYJ104V	Metal	100K ohms 1/16W	R507	ERJ3GEYJ101V	Metal	100 ohms 1/16W
R266	ERJ3GEYJ222V	Metal	2.2K ohms 1/16W	R508	ERJ3GEYJ102V	Metal	1K ohms 1/16W
R267	ERJ3GEY0R00	Metal	0 ohm 1/16W	R510	ERJ3GEYJ222V	Metal	2.2K ohms 1/16W
R269	ERJ3GEYJ200V	Metal	20 ohms 1/16W	R511	ERJ3GEYJ101V	Metal	100 ohms 1/16W
R301-304	ERJ3GEYJ103V	Metal	10K ohms 1/16W	R512	ERJ3GEYJ154V	Metal	150K ohms 1/16W
R305-307	ERJ3GEYJ222V	Metal	2.2K ohms 1/16W	R513	ERJ3GEYJ222V	Metal	2.2K ohms 1/16W
R308	ERJ3GEYJ472V	Metal	4.7K ohms 1/16W	R514	ERJ3GEYJ223V	Metal	22K ohms 1/16W
R309,310	ERJ3GEY0R00	Metal	0 ohm 1/16W	R516	YWR0816P622D	Metal	6.2K ohms 1/16W
R311	ERJ3GEYJ221V	Metal	220 ohms 1/16W	R517	YWR0816P152D	Metal	1.5K ohms 1/16W
R313	ERJ3GEYJ331V	Metal	330 ohms 1/16W	R518	YWR0816P162D	Metal	1.6K ohms 1/16W
R315	ERJ3GEY0R00	Metal	0 ohm 1/16W	R519,520	ERJ3GEYJ391V	Metal	390 ohms 1/16W
R341	ERJ3GEYJ104V	Metal	100K ohms 1/16W	R521	ERJ3GEYJ102V	Metal	1K ohms 1/16W
R342	ERJ3GEYJ473V	Metal	47K ohms 1/16W	R522	ERJ3GEYJ101V	Metal	100 ohms 1/16W
R343	ERJ3GEYJ332V	Metal	3.3K ohms 1/16W	R523	ERJ3GEYJ102V	Metal	1K ohms 1/16W
R344	ERJ6GEY0R00	Metal	0 ohm 1/10W	R525	ERJ3GEYJ101V	Metal	100 ohms 1/16W
R351-354	ERJ3GEYJ103V	Metal	10K ohms 1/16W	R526	ERJ3GEYJ102V	Metal	1K ohms 1/16W
R355-357	ERJ3GEYJ222V	Metal	2.2K ohms 1/16W	R527	ERJ3GEY0R00	Metal	0 ohm 1/16W
R358	ERJ3GEYJ472V	Metal	4.7K ohms 1/16W	R528	ERJ3GEYJ101V	Metal	100 ohms 1/16W
R359,360	ERJ3GEY0R00	Metal	0 ohm 1/16W	R551-553	ERJ3GEY0R00	Metal	0 ohm 1/16W
R361,362	ERJ3GEYJ221V	Metal	220 ohms 1/16W	R555	ERJ3GEY0R00	Metal	0 ohm 1/16W
R363,364	ERJ3GEYJ331V	Metal	330 ohms 1/16W	R556-559	ERJ3GEYJ103V	Metal	10K ohms 1/16W
R365	ERJ3GEY0R00	Metal	0 ohm 1/16W	R561-598	ERJ3GEYJ470V	Metal	47 ohms 1/16W
R366	ERJ3GEYJ221V	Metal	220 ohms 1/16W	R599	ERJ14YJ1R0H	Metal	1 ohm 1/4W
R367	ERJ3GEYJ331V	Metal	330 ohms 1/16W	R605	ERJ3GEY0R00	Metal	0 ohm 1/16W
R368,369	ERJ3GEYJ103V	Metal	10K ohms 1/16W	R606-609	ERJ3GEYJ103V	Metal	10K ohms 1/16W
R409,410	ERJ3GEYJ103V	Metal	10K ohms 1/16W	R611-648	ERJ3GEYJ470V	Metal	47 ohms 1/16W
R411	ERJ3GEYJ105V	Metal	1M ohms 1/16W	R649	ERJ3GEYJ101V	Metal	100 ohms 1/16W
R412	ERJ3GEYJ152V	Metal	1.5K ohms 1/16W	R655	ERJ3GEY0R00	Metal	0 ohm 1/16W
R414	ERJ3GEYJ103V	Metal	10K ohms 1/16W	R656-659	ERJ3GEYJ103V	Metal	10K ohms 1/16W
R415	ERJ3GEY0R00	Metal	0 ohm 1/16W	R661-682	ERJ3GEYJ470V	Metal	47 ohms 1/16W
R417,419	ERJ3GEYJ222V	Metal	2.2K ohms 1/16W	R683	ERJ3GEYJ101V	Metal	100 ohms 1/16W
R421,422	ERJ3GEYJ153V	Metal	15K ohms 1/16W	R691-696	ERJ3GEYJ470V	Metal	47 ohms 1/16W
R424,426	ERJ3GEYJ682V	Metal	6.8K ohms 1/16W	R701	ERJ3GEYJ102V	Metal	1K ohms 1/16W
R428	ERJ3GEYJ154V	Metal	150K ohms 1/16W	R702	ERJ3GEYJ161V	Metal	160 ohms 1/16W
R429	ERJ3GEY0R00	Metal	0 ohm 1/16W	R703	ERJ3GEYJ512V	Metal	5.1K ohms 1/16W
R431-433	ERJ3GEYJ103V	Metal	10K ohms 1/16W	R719,720	ERJ3GEYJ391V	Metal	390 ohms 1/16W
R434-436	ERJ3GEY0R00	Metal	0 ohm 1/16W	R721	ERJ3GEYJ102V	Metal	1K ohms 1/16W
R438,439	ERJ3GEYJ103V	Metal	10K ohms 1/16W	R722	ERJ14YJ1R0H	Metal	1 ohm 1/4W
R440-448	ERJ3GEYJ100V	Metal	10 ohms 1/16W	R751	ERJ3GEYJ102V	Metal	1K ohms 1/16W
R449-451	ERJ3GEYJ103V	Metal	10K ohms 1/16W	R752	ERJ3GEYJ360V	Metal	36 ohms 1/16W
R452	ERJ3GEYJ562V	Metal	5.6K ohms 1/16W	R753	ERJ3GEYJ512V	Metal	5.1K ohms 1/16W
R453-456	ERJ3GEYJ153V	Metal	15K ohms 1/16W	R756	ERJ3GEYJ102V	Metal	1K ohms 1/16W
R457,458	ERJ3GEYJ363V	Metal	36K ohms 1/16W	R757	ERJ3GEYJ101V	Metal	100 ohms 1/16W
R459	ERJ3GEYJ103V	Metal	10K ohms 1/16W	R758,759	ERJ3GEYJ102V	Metal	1K ohms 1/16W
R460,461	ERJ3GEY0R00	Metal	0 ohm 1/16W	R760	ERJ3GEYJ222V	Metal	2.2K ohms 1/16W
R464	ERJ3GEYJ303V	Metal	30K ohms 1/16W	R761	ERJ3GEYJ101V	Metal	100 ohms 1/16W
R465,466	ERJ3GEYJ153V	Metal	15K ohms 1/16W	R762	ERJ3GEYJ154V	Metal	150K ohms 1/16W
R468,472	ERJ3GEY0R00	Metal	0 ohm 1/16W	R763	ERJ3GEYJ222V	Metal	2.2K ohms 1/16W

REF. NO.	PART NO.	DESCRIPTION		REF. NO.	PART NO.	DESCRIPTION	
R764,765	ERJ3GEYJ223V	Metal	22K ohms 1/16W	R924,926	ERJ3GEYJ103V	Metal	10K ohms 1/16W
R766	YWR0816P752D	Metal	7.5K ohms 1/16W	R927,928	ERJ3GEYJ470V	Metal	47 ohms 1/16W
R767	YWR0816P222D	Metal	2.2K ohms 1/16W	R930	ERJ3GEYJ100V	Metal	10 ohms 1/16W
R768	YWR0816P242D	Metal	2.4K ohms 1/16W	R931,932	ERJ3GEY0R00	Metal	0 ohm 1/16W
R769,770	ERJ3GEYJ391V	Metal	390 ohms 1/16W	R933,934	ERJ3GEYJ103V	Metal	10K ohms 1/16W
R771	ERJ3GEYJ102V	Metal	1K ohms 1/16W	R935,936	ERJ3GEYJ102V	Metal	1K ohms 1/16W
R772	ERJ14YJ1R0H	Metal	1 ohm 1/4W	R941	ERJ3GEYJ103V	Metal	10K ohms 1/16W
R773	ERJ3GEYJ103V	Metal	10K ohms 1/16W	R945	ERJ3GEYJ470V	Metal	47 ohms 1/16W
R777	ERJ3GEYJ223V	Metal	22K ohms 1/16W	R946,947	ERJ3GEYJ103V	Metal	10K ohms 1/16W
R788	ERJ3GEYJ101V	Metal	100 ohms 1/16W	R951-954	ERJ3GEYJ103V	Metal	10K ohms 1/16W
R789	ERJ3GEY0R00	Metal	0 ohm 1/16W	R956-958	ERJ3GEYJ103V	Metal	10K ohms 1/16W
R790	ERJ3GEYJ222V	Metal	2.2K ohms 1/16W	R959	ERJ3GEY0R00	Metal	0 ohm 1/16W
R801-804	ERJ3GEYJ103V	Metal	10K ohms 1/16W	R964	ERJ3GEYJ273V	Metal	27K ohms 1/16W
R805,806	ERJ3GEYJ470V	Metal	47 ohms 1/16W	R965	ERJ3GEYJ223V	Metal	22K ohms 1/16W
R807-810	ERJ3GEY0R00	Metal	0 ohm 1/16W	R967	ERJ3GEYJ102V	Metal	1K ohms 1/16W
R811	ERJ3GEYJ470V	Metal	47 ohms 1/16W	R968	ERJ3GEYJ271V	Metal	270 ohms 1/16W
R812	ERJ3GEYJ330V	Metal	33 ohms 1/16W	R969	ERJ3GEYJ331V	Metal	330 ohms 1/16W
R815-820	ERJ3GEYJ470V	Metal	47 ohms 1/16W	R970	ERJ3GEYJ132V	Metal	1.3K ohms 1/16W
R822	ERJ3GEYJ103V	Metal	10K ohms 1/16W	R971	ERJ3GEYJ750V	Metal	75 ohms 1/16W
R823	ERJ3GEYJ470V	Metal	47 ohms 1/16W	R972	ERJ3GEYJ102V	Metal	1K ohms 1/16W
R824	ERJ3GEYJ103V	Metal	10K ohms 1/16W	R973	ERJ3GEYJ221V	Metal	220 ohms 1/16W
R825	ERJ3GEYJ102V	Metal	1K ohms 1/16W	R977-1000	ERJ3GEYJ103V	Metal	10K ohms 1/16W
R827,828	ERJ3GEYJ470V	Metal	47 ohms 1/16W	R1003-1006	ERJ3GEY0R00	Metal	0 ohm 1/16W
R830	ERJ3GEYJ100V	Metal	10 ohms 1/16W	VR551,601	EVM1DSW30B14	Semifixed Resistor	10K ohms
R831,832	ERJ3GEY0R00	Metal	0 ohm 1/16W	VR651,701	EVM1DSW30B14	Semifixed Resistor	10K ohms
R833,834	ERJ3GEYJ103V	Metal	10K ohms 1/16W	VR751	EVM1DSW30B13	Semifixed Resistor	1K ohms
R835,836	ERJ3GEYJ102V	Metal	1K ohms 1/16W	Z21,29	YWMNR14EJ103	Block Resistor	10K ohms
R837	ERJ3GEYJ470V	Metal	47 ohms 1/16W	Z30-35	YWMNR14EJ220	Block Resistor	22 ohms
R839	ERJ3GEYJ105V	Metal	1M ohms 1/16W	Z36-39	D1H84704A008	Block Resistor	47 ohms
R840	ERJ3GEYJ332V	Metal	3.3K ohms 1/16W	Z40-43	D1H810040003	Block Resistor	10 ohms
R841	ERJ3GEY0R00	Metal	0 ohm 1/16W	Z44-57	YWMNR14EJ103	Block Resistor	10K ohms
R842	ERJ3GEYJ105V	Metal	1M ohms 1/16W	Z62	YWMNR14EJ391	Block Resistor	390 ohms
R843	ERJ3GEYJ680V	Metal	68 ohms 1/16W	Z63	YWMNR14EJ103	Block Resistor	10K ohms
R845	ERJ3GEYJ470V	Metal	47 ohms 1/16W	Z64	YWMNR14EJ391	Block Resistor	390 ohms
R846,847	ERJ3GEYJ750V	Metal	75 ohms 1/16W	Z65	YWMNR14EJ103	Block Resistor	10K ohms
R848	ERJ3GEYJ332V	Metal	3.3K ohms 1/16W	Z66	YWMNR14EJ391	Block Resistor	390 ohms
R849	ERJ3GEYJ103V	Metal	10K ohms 1/16W	Z67	YWMNR14EJ103	Block Resistor	10K ohms
R850	ERJ3GEYJ105V	Metal	1M ohms 1/16W	Z68	YWMNR14EJ391	Block Resistor	390 ohms
R851	ERJ3GEY0R00	Metal	0 ohm 1/16W	Z69-79	YWMNR14EJ103	Block Resistor	10K ohms
R852-854	ERJ3GEYJ470V	Metal	47 ohms 1/16W	Z88-91	D1H868040001	Block Resistor	68 ohms
R855,856	ERJ3GEYJ100V	Metal	10 ohms 1/16W	Z92-95	D1H84704A008	Block Resistor	47 ohms
R857	ERJ3GEYJ103V	Metal	10K ohms 1/16W	Z96-122	YWMNR14EJ220	Block Resistor	22 ohms
R858-860	ERJ8GEY0R00V	Metal	0 ohm 1/8W	Z123-130	YWMNR14EJ103	Block Resistor	10K ohms
R861	ERJ3GEYJ163V	Metal	16K ohms 1/16W	Z131-154	YWMNR14EJ220	Block Resistor	22 ohms
R862-866	ERJ3GEYJ103V	Metal	10K ohms 1/16W	Z155-158	YWMNR14EJ103	Block Resistor	10K ohms
R867,868	ERJ3GEY0R00	Metal	0 ohm 1/16W	Z161-169	YWMNR14EJ220	Block Resistor	22 ohms
R873	ERJ3GEYJ101V	Metal	100 ohms 1/16W	Z170-173	YWMNR14EJ103	Block Resistor	10K ohms
R901-904	ERJ3GEYJ103V	Metal	10K ohms 1/16W	Z174,175	YWMNR14EJ220	Block Resistor	22 ohms
R905,906	ERJ3GEYJ470V	Metal	47 ohms 1/16W	Z177	YWMNR14EJ220	Block Resistor	22 ohms
R907-910	ERJ3GEY0R00	Metal	0 ohm 1/16W	Z178-199	YWMNR14EJ103	Block Resistor	10K ohms
R911	ERJ3GEYJ470V	Metal	47 ohms 1/16W	Z201-203	YWMNR14EJ000	Block Resistor	0 ohm
R912	ERJ3GEYJ330V	Metal	33 ohms 1/16W	Z208-213	YWMNR14EJ220	Block Resistor	22 ohms
R915-917	ERJ3GEYJ470V	Metal	47 ohms 1/16W	Z215-219	YWMNR14EJ220	Block Resistor	22 ohms
R919,921	ERJ3GEYJ470V	Metal	47 ohms 1/16W	Z220-242	YWMNR14EJ000	Block Resistor	0 ohm
R922,923	ERJ3GEYJ470V	Metal	47 ohms 1/16W	Z243-248	YWMNR14EJ103	Block Resistor	10K ohms

REF. NO.	PART NO.	DESCRIPTION		REF. NO.	PART NO.	DESCRIPTION	
Z250,251	YWMNR14EJ202	Block Resistor	2K ohms	C57	F1H1H471A013	Ceramic	470 pF
Z252-255	YWMNR14EJ103	Block Resistor	10K ohms	C58	F1H1H103A013	Ceramic	0.01 µF
Z256-263	YWMNR14EJ000	Block Resistor	0 ohm	C59	F1H1H471A013	Ceramic	470 pF
Z288-297	YWMNR14EJ103	Block Resistor	10K ohms	C60	F1H1H103A013	Ceramic	0.01 µF
Z301-304	YWMNR14EJ000	Block Resistor	0 ohm	C61	MCUV1E104ZFV	Ceramic	0.1 µF
Z306	YWMNR14EJ103	Block Resistor	10K ohms	C62-65	MCUV1E104ZFV	Ceramic	0.1 µF
Z307-310	YWMNR14EJ000	Block Resistor	0 ohm	C66	ECST1AC476R	Tantalum	47 µF 10V
Z312-315	YWMNR14EJ000	Block Resistor	0 ohm	C67,94	MCUV1E104ZFV	Ceramic	0.1 µF
Z316,317	D1H822140001	Block Resistor	220 ohms	C95-100	MCUV1E104ZFV	Ceramic	0.1 µF
Z320,321	D1H83314A008	Block Resistor	330 ohms	C101	ECST1AC336R	Tantalum	33 µF 10V
Z351-354	YWMNR14EJ000	Block Resistor	0 ohm	C102-108	MCUV1E104ZFV	Ceramic	0.1 µF
Z356	YWMNR14EJ103	Block Resistor	10K ohms	C110	ECST1AC336R	Tantalum	33 µF 10V
Z357-360	YWMNR14EJ000	Block Resistor	0 ohm	C111-121	MCUV1E104ZFV	Ceramic	0.1 µF
Z362-365	YWMNR14EJ000	Block Resistor	0 ohm	C122	ECST1AC336R	Tantalum	33 µF 10V
Z366-369	D1H822140001	Block Resistor	220 ohms	C123,124	MCUV1E104ZFV	Ceramic	0.1 µF
Z370-373	D1H83314A008	Block Resistor	330 ohms	C125	ECST1AC336R	Tantalum	33 µF 10V
Z374,375	D1H822140001	Block Resistor	220 ohms	C126-133	MCUV1E104ZFV	Ceramic	0.1 µF
Z376,377	D1H83314A008	Block Resistor	330 ohms	C134	F2G1C331000I	Electrolytic	330 µF 16V
Z401,402	YWMNR14EJ000	Block Resistor	0 ohm	C135-144	MCUV1E104ZFV	Ceramic	0.1 µF
Z404	YWMNR14EJ000	Block Resistor	0 ohm	C145	ECST1AC336R	Tantalum	33 µF 10V
Z405,406	YWMNR14EJ103	Block Resistor	10K ohms	C146-148	MCUV1E104ZFV	Ceramic	0.1 µF
Z407,408	YWMNR14EJ000	Block Resistor	0 ohm	C153-156	MCUV1E104ZFV	Ceramic	0.1 µF
Z801-804	D1H810140001	Block Resistor	100 ohms	C157	ECST1AC336R	Tantalum	33 µF 10V
Z805-812	YWMNR14EJ000	Block Resistor	0 ohm	C158-164	MCUV1E104ZFV	Ceramic	0.1 µF
Z813-825	D1H84704A008	Block Resistor	47 ohms	C165	ECST1AC336R	Tantalum	33 µF 10V
Z826	YWMNR14EJ103	Block Resistor	10K ohms	C166	F1H1C104A001	Ceramic	0.1 µF
Z827,828	D1H84704A008	Block Resistor	47 ohms	C167	ECST1CY105R	Electrolytic	1 µF 16V
Z829-839	YWMNR14EJ103	Block Resistor	10K ohms	C168	ECST1AC336R	Tantalum	33 µF 10V
Z901-904	D1H810140001	Block Resistor	100 ohms	C169,170	ECST1AC336R	Tantalum	33 µF 10V
Z905-912	YWMNR14EJ000	Block Resistor	0 ohm	C171-178	MCUV1E104ZFV	Ceramic	0.1 µF
Z913-925	D1H84704A008	Block Resistor	47 ohms	C201	F1H1H103A013	Ceramic	0.01 µF
Z926	YWMNR14EJ103	Block Resistor	10K ohms	C202,207	ECST1CC336R	Tantalum	33 µF 16V
Z927,928	D1H84704A008	Block Resistor	47 ohms	C203	F1H1H103A013	Ceramic	0.01 µF
Z929-939	YWMNR14EJ103	Block Resistor	10K ohms	C204-206	F1H1H103A013	Ceramic	0.01 µF
Z1002,1003	YWMNR14EJ103	Block Resistor	10K ohms	C208-213	F1H1H103A013	Ceramic	0.01 µF
Z1004,1005	YWMNR14EJ220	Block Resistor	22 ohms	C214	ECST1CC336R	Tantalum	33 µF 16V
C13	F2G0J101000Z	Electrolytic	100 µF 6.3V	C215-219	F1H1H103A013	Ceramic	0.01 µF
C14	MCUV1E104ZFV	Ceramic	0.1 µF	C220	ECST1CC336R	Tantalum	33 µF 16V
C16	F2G0J101000Z	Electrolytic	100 µF 6.3V	C221-223	F1H1H103A013	Ceramic	0.01 µF
C21	MCUV1E104ZFV	Ceramic	0.1 µF	C224	MCUV1E104ZFV	Ceramic	0.1 µF
C22	ECST1CY105R	Electrolytic	1 µF 16V	C225	ECST1CC336R	Tantalum	33 µF 16V
C23	F1H1H103A013	Ceramic	0.01 µF	C226	MCUV1E104ZFV	Ceramic	0.1 µF
C24	ECST1AY106R	Ceramic	10 µF	C227	ECST1CC336R	Tantalum	33 µF 16V
C25	MCUV1E104ZFV	Ceramic	0.1 µF	C240,241	F1H1H15R00002	Ceramic	5 pF
C26	F2G1H3R30002	Electrolytic	3.3 µF 50V	C242-245	MCUV1E104ZFV	Ceramic	0.1 µF
C27	MCUV1E104ZFV	Ceramic	0.1 µF	C246	F1H1H560A004	Ceramic	56 pF
C28	MCUV1E104ZFV	Ceramic	0.1 µF	C301	ECST1CC336R	Tantalum	33 µF 16V
C29	F1H1H100A017	Ceramic	10 pF	C302-305	F1H1H103A013	Ceramic	0.01 µF
C30	F1H1H5R00002	Ceramic	5 pF	C341-343	MCUV1E104ZFV	Ceramic	0.1 µF
C32	MCUV1E104ZFV	Ceramic	0.1 µF	C351	ECST1CC336R	Tantalum	33 µF 16V
C33	MCUV1E104ZFV	Ceramic	0.1 µF	C352-355	F1H1H103A013	Ceramic	0.01 µF
C40-49	F1H1H103A013	Ceramic	0.01 µF	C391-393	MCUV1E104ZFV	Ceramic	0.1 µF
C50	MCUV1E104ZFV	Ceramic	0.1 µF	C420,422	MCUV1E104ZFV	Ceramic	0.1 µF
C51-55	F1H1H103A013	Ceramic	0.01 µF	C423	F1H1H200A607	Ceramic	20 pF
C56	MCUV1E104ZFV	Ceramic	0.1 µF	C424	F1H1H300A004	Ceramic	30 pF

REF. NO.	PART NO.	DESCRIPTION	
C425	MCUV1E104ZFV	Ceramic	0.1 µF
C426	ECST1CC336R	Tantalum	33 µF 16V
C428	EEVHB1C100R	Electrolytic	10 µF 16V
C429	MCUV1E104ZFV	Ceramic	0.1 µF
C430,431	MCUV1E104ZFV	Ceramic	0.1 µF
C432	EEVHB0J220R	Electrolytic	22 µF 6.3V
C433,434	MCUV1E104ZFV	Ceramic	0.1 µF
C435	EEVHB1C100R	Electrolytic	10 µF 16V
C436,437	MCUV1E104ZFV	Ceramic	0.1 µF
C438	F1H1H101A004	Ceramic	100 pF
C439	MCUV1E104ZFV	Ceramic	0.1 µF
C441	F1H1C104A001	Ceramic	0.1 µF
C442	MCUV1E104ZFV	Ceramic	0.1 µF
C447-451	MCUV1E104ZFV	Ceramic	0.1 µF
C452,453	F1H1H101A004	Ceramic	100 pF
C454	F1H1C104A001	Ceramic	0.1 µF
C456	MCUV1E104ZFV	Ceramic	0.1 µF
C457,458	F1H1H101A004	Ceramic	100 pF
C459	MCUV1E104ZFV	Ceramic	0.1 µF
C460	MCUV1E104ZFV	Ceramic	0.1 µF
C461	ECST1CC336R	Tantalum	33 µF 16V
C462	MCUV1E104ZFV	Ceramic	0.1 µF
C509	F1H1H101A004	Ceramic	100 pF
C510	F1H0J105A001	Ceramic	1 µF
C511	F1H1H331D002	Ceramic	330 pF
C512	MCUV1H102KBV	Ceramic	1000 pF
C513	MCUV1E104ZFV	Ceramic	0.1 µF
C514	F1H0J105A001	Ceramic	1 µF
C515	MCUV1E104ZFV	Ceramic	0.1 µF
C516	F2G0J1010002	Electrolytic	100 µF 6.3V
C517	MCUV1H820JCV	Ceramic	82 pF
C518	F1H1H200A607	Ceramic	20 pF
C519	EEVHP1V2R2R	Electrolytic	2.2 µF 35V
C557	F1H1H103A013	Ceramic	0.01 µF
C558	MCUV1E104ZFV	Ceramic	0.1 µF
C559	F2G1C4700003	Electrolytic	47 µF 16V
C560	MCUV1E104ZFV	Ceramic	0.1 µF
C561	F2G1C1000002	Electrolytic	10 µF 16V
C562	F2G1H1R000001	Electrolytic	1 µF 50V
C563	MCUV1E104ZFV	Ceramic	0.1 µF
C564	F2G1C1000002	Electrolytic	10 µF 16V
C565	F1H1H103A013	Ceramic	0.01 µF
C566	MCUV1E104ZFV	Ceramic	0.1 µF
C567	F2G1C4700003	Electrolytic	47 µF 16V
C568-570	MCUV1E104ZFV	Ceramic	0.1 µF
C571	F2G1C4700003	Electrolytic	47 µF 16V
C572-574	MCUV1E104ZFV	Ceramic	0.1 µF
C575	F2G0J1010002	Electrolytic	100 µF 6.3V
C576-586	MCUV1E104ZFV	Ceramic	0.1 µF
C607	F1H1H103A013	Ceramic	0.01 µF
C608	MCUV1E104ZFV	Ceramic	0.1 µF
C609	F2G1C4700003	Electrolytic	47 µF 16V
C610	MCUV1E104ZFV	Ceramic	0.1 µF
C611	F2G1C1000002	Electrolytic	10 µF 16V
C612	F2G1H1R000001	Electrolytic	1 µF 50V

REF. NO.	PART NO.	DESCRIPTION	
C613	MCUV1E104ZFV	Ceramic	0.1 µF
C614	F2G1C1000002	Electrolytic	10 µF 16V
C615	F1H1H103A013	Ceramic	0.01 µF
C616	MCUV1E104ZFV	Ceramic	0.1 µF
C617	F2G1C4700003	Electrolytic	47 µF 16V
C618-620	MCUV1E104ZFV	Ceramic	0.1 µF
C621	F2G1C4700003	Electrolytic	47 µF 16V
C622-624	MCUV1E104ZFV	Ceramic	0.1 µF
C625	F2G0J1010002	Electrolytic	100 µF 6.3V
C626,627	MCUV1E104ZFV	Ceramic	0.1 µF
C657	F1H1H103A013	Ceramic	0.01 µF
C658	MCUV1E104ZFV	Ceramic	0.1 µF
C659	F2G1C4700003	Electrolytic	47 µF 16V
C660	MCUV1E104ZFV	Ceramic	0.1 µF
C661	F2G1C1000002	Electrolytic	10 µF 16V
C662	F2G1H1R000001	Electrolytic	1 µF 50V
C663	MCUV1E104ZFV	Ceramic	0.1 µF
C664	F2G1C1000002	Electrolytic	10 µF 16V
C665	F1H1H103A013	Ceramic	0.01 µF
C666	MCUV1E104ZFV	Ceramic	0.1 µF
C667	F2G1C4700003	Electrolytic	47 µF 16V
C668-670	MCUV1E104ZFV	Ceramic	0.1 µF
C671	F2G1C4700003	Electrolytic	47 µF 16V
C672-674	MCUV1E104ZFV	Ceramic	0.1 µF
C675	F2G0J1010002	Electrolytic	100 µF 6.3V
C691-693	MCUV1E104ZFV	Ceramic	0.1 µF
C701	MCUV1E104ZFV	Ceramic	0.1 µF
C702	F2G1C1000002	Electrolytic	10 µF 16V
C703	MCUV1E104ZFV	Ceramic	0.1 µF
C704	F2G1C1000002	Electrolytic	10 µF 16V
C705	MCUV1E104ZFV	Ceramic	0.1 µF
C706	F2G1C1000002	Electrolytic	10 µF 16V
C707	MCUV1E104ZFV	Ceramic	0.1 µF
C716	F2G0J1010002	Electrolytic	100 µF 6.3V
C717	MCUV1H820JCV	Ceramic	82 pF
C718	F1H1H200A607	Ceramic	20 pF
C719	EEVHP1V2R2R	Electrolytic	2.2 µF 35V
C753	MCUV1E104ZFV	Ceramic	0.1 µF
C752	F2G1C1000002	Electrolytic	10 µF 16V
C753	MCUV1E104ZFV	Ceramic	0.1 µF
C754	F2G1C1000002	Electrolytic	10 µF 16V
C755	MCUV1E104ZFV	Ceramic	0.1 µF
C756	F2G1C1000002	Electrolytic	10 µF 16V
C757	MCUV1E104ZFV	Ceramic	0.1 µF
C759	F1H1H101A004	Ceramic	100 pF
C760	F1H0J105A001	Ceramic	1 µF
C761	F1H1H331D002	Ceramic	330 pF
C762	MCUV1H102KBV	Ceramic	1000 pF
C763	MCUV1E104ZFV	Ceramic	0.1 µF
C764	F1H0J105A001	Ceramic	1 µF
C765	MCUV1E104ZFV	Ceramic	0.1 µF
C766	F2G0J1010002	Electrolytic	100 µF 6.3V
C767	MCUV1H820JCV	Ceramic	82 pF
C769	EEVHP1V2R2R	Electrolytic	2.2 µF 35V
C770,771	MCUV1E104ZFV	Ceramic	0.1 µF

REF. NO.	PART NO.	DESCRIPTION	
C776,777	MCUV1E104ZFV	Ceramic	0.1 µF
C778-780	F2G0J1010002	Electrolytic	100 µF 6.3V
C801	EEVHB0J330R	Electrolytic	33 µF 6.3V
C802-808	MCUV1E104ZFV	Ceramic	0.1 µF
C809	ECST1AC336R	Tantalum	33 µF 10V
C810-819	F1H1H103A013	Ceramic	0.01 µF
C820	ECST1AC336R	Tantalum	33 µF 10V
C821-828	F1H1H103A013	Ceramic	0.01 µF
C829-846	MCUV1E104ZFV	Ceramic	0.1 µF
C847	F2G0J1010002	Electrolytic	100 µF 6.3V
C848,849	MCUV1E104ZFV	Ceramic	0.1 µF
C850	F2G0J1010002	Electrolytic	100 µF 6.3V
C851	F1H1H471A013	Ceramic	470 pF
C852	F1H0J105A001	Ceramic	1 µF
C853	F1H1H471A013	Ceramic	470 pF
C854	F1H1H103A013	Ceramic	0.01 µF
C857,858	F1H1H100A017	Ceramic	10 pF
C859,860	MCUV1E104ZFV	Ceramic	0.1 µF
C862,863	MCUV1E104ZFV	Ceramic	0.1 µF
C864	EEVHB0J330R	Electrolytic	33 µF 6.3V
C865-868	MCUV1E104ZFV	Ceramic	0.1 µF
C869	F1H1H5R00002	Ceramic	5 pF
C870	F1H1H100A017	Ceramic	10 pF
C871	F2G0J1010002	Electrolytic	100 µF 6.3V
C872	F1H1A154A001	Ceramic	0.15 µF
C873	F1H1H5R00002	Ceramic	5 pF
C874	F1H1H100A017	Ceramic	10 pF
C875,876	MCUV1E104ZFV	Ceramic	0.1 µF
C877	F1H1E1520002	Ceramic	1500 pF
C878,879	MCUV1E104ZFV	Ceramic	0.1 µF
C880	F1H0J105A001	Ceramic	1 µF
C881,882	MCUV1E104ZFV	Ceramic	0.1 µF
C886,887	ECST1AC336R	Tantalum	33 µF 10V
C901	EEVHB0J330R	Electrolytic	33 µF 6.3V
C902-908	MCUV1E104ZFV	Ceramic	0.1 µF
C909	ECST1AC336R	Tantalum	33 µF 10V
C910-919	F1H1H103A013	Ceramic	0.01 µF
C920	ECST1AC336R	Tantalum	33 µF 10V
C921-928	F1H1H103A013	Ceramic	0.01 µF
C929-946	MCUV1E104ZFV	Ceramic	0.1 µF
C947	F2G0J1010002	Electrolytic	100 µF 6.3V
C948,949	MCUV1E104ZFV	Ceramic	0.1 µF
C950	F2G0J1010002	Electrolytic	100 µF 6.3V
C951	F1H1H471A013	Ceramic	470 pF
C952	F1H0J105A001	Ceramic	1 µF
C953	F1H1H471A013	Ceramic	470 pF
C954	F1H1H103A013	Ceramic	0.01 µF
C955,964	MCUV1E104ZFV	Ceramic	0.1 µF
C966,967	MCUV1E104ZFV	Ceramic	0.1 µF
C968	ECST1CC336R	Tantalum	33 µF 16V
C969,971	MCUV1E104ZFV	Ceramic	0.1 µF
C972-984	MCUV1E104ZFV	Ceramic	0.1 µF
C985	F1H0J105A001	Ceramic	1 µF
C986,987	ECST1AC336R	Tantalum	33 µF 10V
C989	MCUV1E104ZFV	Ceramic	0.1 µF

REF. NO.	PART NO.	DESCRIPTION	
CT21	ECRJA010A11X	Trimmer	
CT801,802	ECRJA020E11W	Trimmer	
CF11-14	F1Z1E1520001	LC Filter	
L22-25	ELJPA100KF	Coil	10 µH
L27-30	ELJPA100KF	Coil	10 µH
L33,35	ELJPA100KF	Coil	10 µH
L38,41	ELJPA100KF	Coil	10 µH
L45,47	ELJPA100KF	Coil	10 µH
L48-52	ELJPA100KF	Coil	10 µH
L55,57	ELJPA100KF	Coil	10 µH
L60-62	ELJPA100KF	Coil	10 µH
L201,202	ELJPA100KF	Coil	10 µH
L204	ELJPA100KF	Coil	10 µH
L207-212	J0JCC0000049	Coil	
L213,301	ELJPA100KF	Coil	10 µH
L351	ELJPA100KF	Coil	10 µH
L403,404	J0JCC0000049	Coil	
L407-409	ELJPA100KF	Coil	10 µH
L410-421	J0JCC0000049	Coil	
L553,554	J0JGC0000008	Coil	
L555	ELJPA100KF	Coil	10 µH
L556,603	J0JGC0000008	Coil	
L604	J0JGC0000008	Coil	
L605	ELJPA100KF	Coil	10 µH
L606,653	J0JGC0000008	Coil	
L654	J0JGC0000008	Coil	
L655	ELJPA100KF	Coil	10 µH
L656	J0JGC0000008	Coil	
L702,752	G1C8R2J00002	Coil	8.2 µH
L753,754	G1C8R2J00002	Coil	8.2 µH
L801	ELJPA100KF	Coil	10 µH
L802,803	J0JGC0000008	Coil	
L804	ELJPA100KF	Coil	10 µH
L805	EIC4EJ011E	Coil	1.92 µH
L808	YWF3216C181K	Coil	180 µH
L809,810	ELJPA100KF	Coil	10 µH
L812	J0JGC0000008	Coil	
L813,814	G1C8R2J00002	Coil	8.2 µH
L901	ELJPA100KF	Coil	10 µH
L902-904	J0JGC0000008	Coil	
L905-908	G1C8R2J00002	Coil	8.2 µH
X21	H1A1505B0001	Oscillator	
X22	H0J327000005	Crystal Oscillator	
X201	YWD3X8400GA	Crystal Oscillator	
X402	YWM45061474	Crystal Oscillator	
X802	H0H434000001	Crystal Oscillator	
X803	H0J370500003	Crystal Oscillator	
SW11	ESD1165208	Slide Switch	
SW21	YWSMTG101	Push Switch	
SW23	K0D888A00031	Slide Switch	
SW24,25	YWSMTG101	Push Switch	
CN11	K1MN015A00008	15-pin Connector	
CN12	K1FB111D0001	11-pin Connector	
CN13	K1KA40A00140	40-pin Connector	
CN14	K1KA07A00009	7-pin Connector	

REF. NO.	PART NO.	DESCRIPTION
CN15	YWB2BPHSM3	2-pin Connector
CN21	K1KA04A00162	4-pin Connector
CN22	K1KA03A00146	3-pin Connector
CN23,24	YWAXN340130P	40-pin Connector
CN27,28	K1KA03B00113	3-pin Connector
CN201	K1KA64A00041	64-pin Connector
CN202	YWB4BPHSM3TB	4-pin Connector
CN301,351	K1KB50A00082	50-pin Connector
CN402	K1KA50A00125	50-pin Connector
CN403	K1KA13A00067	13-pin Connector
CN404	YWB3BPHSM3TB	3-pin Connector
BZ801	L0DDEA000008	Buzzer
E1-3	YWMEP1866	Terminal
E5-7	YWMEP1866	Terminal
TD201-203	K4CA01000013	Spacer for Heat Sink
TD800-802	K4CA01000013	Spacer for Heat Sink
TP11-14	YW32BM7R5	Test-pin
TP15-17	YWRCT2125TPV	Test-pin
TP21,601	YWRCT2125TPV	Test-pin
TP602,603	YWRCT2125TPV	Test-pin
TP801,802	YWRCT2125TPV	Test-pin

ANALOG BOARD

REF. NO.	PART NO.	DESCRIPTION
PCB2 (RTL)	JH500JKZ2A	Printed Circuit Board Assy
IC141	YW74HC04ADTE	IC
IC142	C0JBAR000282	IC
IC191	YW74HC04ADTE	IC
IC192	C0JBAR000282	IC
IC241	YW74HC04ADTE	IC
IC242	C0JBAR000282	IC
IC291	YW74HC04ADTE	IC
IC292	C0JBAR000282	IC
IC341	YW74HC04ADTE	IC
IC342	C0JBAR000282	IC
IC391	YW74HC04ADTE	IC
IC392	C0JBAR000282	IC
IC441	YW74HC04ADTE	IC
IC442	C0JBAR000282	IC
IC491	YW74HC04ADTE	IC
IC492	C0JBAR000282	IC
IC501	CD22M3494MQ	IC
IC502	C0JBAB000357	IC
IC503	C0JBAE000224	IC

REF. NO.	PART NO.	DESCRIPTION
IC509	C0JBAZ000865	IC
IC601,602	YWNJM2267VT1	IC
IC603	YWTA7805FTL	IC
IC701	YWBA1781GFP	IC
IC702	YWNJM2901VT1	IC
IC703	C0JBAB000357	IC
IC704	C0JBAZ000995	IC
Q101	2SD1819AHL	Transistor
Q102,103	2SB1218AHL	Transistor
Q104	IMZ1A	Transistor
Q105	2SB1218AHL	Transistor
Q106	IMZ1A	Transistor
Q121	2SD1819AHL	Transistor
Q122,123	2SD1218AHL	Transistor
Q124	IMZ1A	Transistor
Q125	2SB1218AHL	Transistor
Q126	IMZ1A	Transistor
Q151	2SD1819AHL	Transistor
Q152,153	2SB1218AHL	Transistor
Q154	IMZ1A	Transistor
Q155	2SB1218AHL	Transistor
Q156	IMZ1A	Transistor
Q171	2SD1819AHL	Transistor
Q172,173	2SB1218AHL	Transistor
Q174	IMZ1A	Transistor
Q175	2SB1218AHL	Transistor
Q176	IMZ1A	Transistor
Q201	2SD1819AHL	Transistor
Q202,203	2SB1218AHL	Transistor
Q204	IMZ1A	Transistor
Q205	2SB1218AHL	Transistor
Q206	IMZ1A	Transistor
Q221	2SD1819AHL	Transistor
Q222,223	2SB1218AHL	Transistor
Q224	IMZ1A	Transistor
Q225	2SB1218AHL	Transistor
Q226	IMZ1A	Transistor
Q251	2SD1819AHL	Transistor
Q252,253	2SB1218AHL	Transistor
Q254	IMZ1A	Transistor
Q255	2SB1218AHL	Transistor
Q256	IMZ1A	Transistor
Q271	2SD1819AHL	Transistor
Q272,273	2SD1218AHL	Transistor
Q274	IMZ1A	Transistor
Q275	2SB1218AHL	Transistor
Q276	IMZ1A	Transistor
Q301	2SD1819AHL	Transistor
Q302,303	2SB1218AHL	Transistor
Q304	IMZ1A	Transistor
Q305	2SB1218AHL	Transistor
Q306	IMZ1A	Transistor
Q321	2SD1819AHL	Transistor
Q322,323	2SB1218AHL	Transistor
Q324	IMZ1A	Transistor

REF. NO.	PART NO.	DESCRIPTION
Q325	2SB1218AHL	Transistor
Q326	IMZ1A	Transistor
Q351	2SD1819AHL	Transistor
Q352,353	2SB1218AHL	Transistor
Q354	IMZ1A	Transistor
Q355	2SB1218AHL	Transistor
Q356	IMZ1A	Transistor
Q371	2SD1819AHL	Transistor
Q372,373	2SB1218AHL	Transistor
Q374	IMZ1A	Transistor
Q375	2SB1218AHL	Transistor
Q376	IMZ1A	Transistor
Q401	2SD1819AHL	Transistor
Q402,403	2SB1218AHL	Transistor
Q404	IMZ1A	Transistor
Q405	2SB1218AHL	Transistor
Q406	IMZ1A	Transistor
Q421	2SD1819AHL	Transistor
Q422,423	2SB1218AHL	Transistor
Q424	IMZ1A	Transistor
Q425	2SB1218AHL	Transistor
Q426	IMZ1A	Transistor
Q451	2SD1819AHL	Transistor
Q452,453	2SB1218AHL	Transistor
Q454	IMZ1A	Transistor
Q455	2SB1218AHL	Transistor
Q456	IMZ1A	Transistor
Q474,476	IMZ1A	Transistor
Q471	2SD1819AHL	Transistor
Q472,473	2SB1218AHL	Transistor
Q475	2SB1218AHL	Transistor
Q501,512	YWXN045010QL	Transistor
Q522,611	2SD1819AHL	Transistor
Q612,613	2SD1819AHL	Transistor
Q621-623	2SD1819AHL	Transistor
Q631-633	2SD1819AHL	Transistor
Q701,704	2SD1819AHL	Transistor
Q705	2SD2453001L	Transistor
D101,121	DA204K-T46	Diode
D151,171	DA204K-T46	Diode
D201,221	DA204K-T46	Diode
D251,271	DA204K-T46	Diode
D301,321	DA204K-T46	Diode
D351,371	DA204K-T46	Diode
D401,421	DA204K-T46	Diode
D451,471	DA204K-T46	Diode
D700-702	MA3X152A0L	Diode
D703	MA730910LL	Diode
TH702	TH1M39B223JH	Thermistor
R11	ERJ14YJ102	Metal 1K ohms 1/4W
R101	ERJ3GEYJ101V	Metal 100 ohms 1/16W
R102	YWR1220Q750D	Metal 75 ohms 1/10W
R103,104	ERJ3GEYJ103V	Metal 10K ohms 1/16W
R105,106	ERJ3GEYJ102V	Metal 1K ohms 1/16W
R107	ERJ3GEYJ222V	Metal 2.2K ohms 1/16W

REF. NO.	PART NO.	DESCRIPTION	
R108	ERJ3GEYJ154V	Metal	150K ohms 1/16W
R109	ERJ3GEYJ101V	Metal	100 ohms 1/16W
R110	ERJ3GEYJ222V	Metal	2.2K ohms 1/16W
R111	ERJ3GEYJ304V	Metal	300K ohms 1/16W
R112	ERJ3GEYJ222V	Metal	2.2K ohms 1/16W
R113	ERJ3GEYJ332V	Metal	3.3K ohms 1/16W
R114	ERJ3GEYJ102V	Metal	1K ohms 1/16W
R115	ERJ3GEYJ270	Metal	27 ohms 1/6W
R116,117	ERJ3GEYJ101V	Metal	100 ohms 1/16W
R118,119	ERJ3GEYJ102V	Metal	1K ohms 1/16W
R120,121	ERJ3GEYJ101V	Metal	100 ohms 1/16W
R122	YWR1220Q750D	Metal	75 ohms 1/10W
R123,124	ERJ3GEYJ103V	Metal	10K ohms 1/16W
R125,126	ERJ3GEYJ102V	Metal	1K ohms 1/16W
R127	ERJ3GEYJ222V	Metal	2.2K ohms 1/16W
R128	ERJ3GEYJ154V	Metal	150K ohms 1/16W
R129	ERJ3GEYJ101V	Metal	100 ohms 1/16W
R130	ERJ3GEYJ222V	Metal	2.2K ohms 1/16W
R131	ERJ3GEYJ304V	Metal	300K ohms 1/16W
R132	ERJ3GEYJ222V	Metal	2.2K ohms 1/16W
R133	ERJ3GEYJ332V	Metal	3.3K ohms 1/16W
R134	ERJ3GEYJ102V	Metal	1K ohms 1/16W
R135	ERJ3GEYJ270	Metal	27 ohms 1/6W
R136,137	ERJ3GEYJ101V	Metal	100 ohms 1/16W
R138,139	ERJ3GEYJ102V	Metal	1K ohms 1/16W
R140	ERJ3GEYJ101V	Metal	100 ohms 1/16W
R141	ERJ3GEYJ103V	Metal	10K ohms 1/16W
R142	ERJ3GEYJ101V	Metal	100 ohms 1/16W
R143,144	ERJ3GEYJ2R2V	Metal	2.2 ohms 1/16W
R145	ERJ3GEYJ101V	Metal	100 ohms 1/16W
R146,147	ERJ3GEYJ2R2V	Metal	2.2 ohms 1/16W
R151	ERJ3GEYJ101V	Metal	100 ohms 1/16W
R152	YWR1220Q750D	Metal	75 ohms 1/10W
R153,154	ERJ3GEYJ103V	Metal	10K ohms 1/16W
R155,156	ERJ3GEYJ102V	Metal	1K ohms 1/16W
R157	ERJ3GEYJ222V	Metal	2.2K ohms 1/16W
R158	ERJ3GEYJ154V	Metal	150K ohms 1/16W
R159	ERJ3GEYJ101V	Metal	100 ohms 1/16W
R160	ERJ3GEYJ222V	Metal	2.2K ohms 1/16W
R161	ERJ3GEYJ304V	Metal	300K ohms 1/16W
R162	ERJ3GEYJ222V	Metal	2.2K ohms 1/16W
R163	ERJ3GEYJ332V	Metal	3.3K ohms 1/16W
R164	ERJ3GEYJ102V	Metal	1K ohms 1/16W
R165	ERJ3GEYJ270	Metal	27 ohms 1/6W
R166,167	ERJ3GEYJ101V	Metal	100 ohms 1/16W
R168,169	ERJ3GEYJ102V	Metal	1K ohms 1/16W
R170,171	ERJ3GEYJ101V	Metal	100 ohms 1/16W
R172	YWR1220Q750D	Metal	75 ohms 1/10W
R173,174	ERJ3GEYJ103V	Metal	10K ohms 1/16W
R175,176	ERJ3GEYJ102V	Metal	1K ohms 1/16W
R177	ERJ3GEYJ222V	Metal	2.2K ohms 1/16W
R178	ERJ3GEYJ154V	Metal	150K ohms 1/16W
R179	ERJ3GEYJ101V	Metal	100 ohms 1/16W
R180	ERJ3GEYJ222V	Metal	2.2K ohms 1/16W
R181	ERJ3GEYJ304V	Metal	300K ohms 1/16W

REF. NO.	PART NO.	DESCRIPTION		REF. NO.	PART NO.	DESCRIPTION	
R182	ERJ3GEYJ222V	Metal	2.2K ohms 1/16W	R260	ERJ3GEYJ222V	Metal	2.2K ohms 1/16W
R183	ERJ3GEYJ332V	Metal	3.3K ohms 1/16W	R261	ERJ3GEYJ304V	Metal	300K ohms 1/16W
R184	ERJ3GEYJ102V	Metal	1K ohms 1/16W	R262	ERJ3GEYJ222V	Metal	2.2K ohms 1/16W
R185	ERJ3GEYJ270	Metal	27 ohms 1/6W	R263	ERJ3GEYJ332V	Metal	3.3K ohms 1/16W
R186,187	ERJ3GEYJ101V	Metal	100 ohms 1/16W	R264	ERJ3GEYJ102V	Metal	1K ohms 1/16W
R188,189	ERJ3GEYJ102V	Metal	1K ohms 1/16W	R265	ERJ3GEYJ270	Metal	27 ohms 1/16W
R190	ERJ3GEYJ101V	Metal	100 ohms 1/16W	R266,267	ERJ3GEYJ101V	Metal	100 ohms 1/16W
R191	ERJ3GEYJ103V	Metal	10K ohms 1/16W	R268,269	ERJ3GEYJ102V	Metal	1K ohms 1/16W
R192	ERJ3GEYJ101V	Metal	100 ohms 1/16W	R270,271	ERJ3GEYJ101V	Metal	100 ohms 1/16W
R193,194	ERJ3GEYJ2R2V	Metal	2.2 ohms 1/16W	R272	YWR1220Q750D	Metal	75 ohms 1/10W
R195	ERJ3GEYJ101V	Metal	100 ohms 1/16W	R273,274	ERJ3GEYJ103V	Metal	10K ohms 1/16W
R196,197	ERJ3GEYJ2R2V	Metal	2.2 ohms 1/16W	R275,276	ERJ3GEYJ102V	Metal	1K ohms 1/16W
R201	ERJ3GEYJ101V	Metal	100 ohms 1/16W	R277	ERJ3GEYJ222V	Metal	2.2K ohms 1/16W
R202	YWR1220Q750D	Metal	75 ohms 1/10W	R278	ERJ3GEYJ154V	Metal	150K ohms 1/16W
R203,204	ERJ3GEYJ103V	Metal	10K ohms 1/16W	R279	ERJ3GEYJ101V	Metal	100 ohms 1/16W
R205,206	ERJ3GEYJ102V	Metal	1K ohms 1/16W	R280	ERJ3GEYJ222V	Metal	2.2K ohms 1/16W
R207	ERJ3GEYJ222V	Metal	2.2K ohms 1/16W	R281	ERJ3GEYJ304V	Metal	300K ohms 1/16W
R208	ERJ3GEYJ154V	Metal	150K ohms 1/16W	R282	ERJ3GEYJ222V	Metal	2.2K ohms 1/16W
R209	ERJ3GEYJ101V	Metal	100 ohms 1/16W	R283	ERJ3GEYJ332V	Metal	3.3K ohms 1/16W
R210	ERJ3GEYJ222V	Metal	2.2K ohms 1/16W	R284	ERJ3GEYJ102V	Metal	1K ohms 1/16W
R211	ERJ3GEYJ304V	Metal	300K ohms 1/16W	R285	ERJ3GEYJ270	Metal	27 ohms 1/16W
R212	ERJ3GEYJ222V	Metal	2.2K ohms 1/16W	R286,287	ERJ3GEYJ101V	Metal	100 ohms 1/16W
R213	ERJ3GEYJ332V	Metal	3.3K ohms 1/16W	R288,289	ERJ3GEYJ102V	Metal	1K ohms 1/16W
R214	ERJ3GEYJ102V	Metal	1K ohms 1/16W	R290	ERJ3GEYJ101V	Metal	100 ohms 1/16W
R215	ERJ3GEYJ270	Metal	27 ohms 1/6W	R291	ERJ3GEYJ103V	Metal	10K ohms 1/16W
R216,217	ERJ3GEYJ101V	Metal	100 ohms 1/16W	R292	ERJ3GEYJ101V	Metal	100 ohms 1/16W
R218,219	ERJ3GEYJ102V	Metal	1K ohms 1/16W	R293,294	ERJ3GEYJ2R2V	Metal	2.2 ohms 1/16W
R220,221	ERJ3GEYJ101V	Metal	100 ohms 1/16W	R295	ERJ3GEYJ101V	Metal	100 ohms 1/16W
R222	YWR1220Q750D	Metal	75 ohms 1/10W	R296,297	ERJ3GEYJ2R2V	Metal	2.2 ohms 1/16W
R223,224	ERJ3GEYJ103V	Metal	10K ohms 1/16W	R301	ERJ3GEYJ101V	Metal	100 ohms 1/16W
R225,226	ERJ3GEYJ102V	Metal	1K ohms 1/16W	R302	YWR1220Q750D	Metal	75 ohms 1/10W
R227	ERJ3GEYJ222V	Metal	2.2K ohms 1/16W	R303,304	ERJ3GEYJ103V	Metal	10K ohms 1/16W
R228	ERJ3GEYJ154V	Metal	150K ohms 1/16W	R305,306	ERJ3GEYJ102V	Metal	1K ohms 1/16W
R229	ERJ3GEYJ101V	Metal	100 ohms 1/16W	R307	ERJ3GEYJ222V	Metal	2.2K ohms 1/16W
R230	ERJ3GEYJ222V	Metal	2.2K ohms 1/16W	R308	ERJ3GEYJ154V	Metal	150K ohms 1/16W
R231	ERJ3GEYJ304V	Metal	300K ohms 1/16W	R309	ERJ3GEYJ101V	Metal	100 ohms 1/16W
R232	ERJ3GEYJ222V	Metal	2.2K ohms 1/16W	R310	ERJ3GEYJ222V	Metal	2.2K ohms 1/16W
R233	ERJ3GEYJ332V	Metal	3.3K ohms 1/16W	R311	ERJ3GEYJ304V	Metal	300K ohms 1/16W
R234	ERJ3GEYJ102V	Metal	1K ohms 1/16W	R312	ERJ3GEYJ222V	Metal	2.2K ohms 1/16W
R235	ERJ3GEYJ270	Metal	27 ohms 1/6W	R313	ERJ3GEYJ332V	Metal	3.3K ohms 1/16W
R236,237	ERJ3GEYJ101V	Metal	100 ohms 1/16W	R314	ERJ3GEYJ102V	Metal	1K ohms 1/16W
R238,239	ERJ3GEYJ102V	Metal	1K ohms 1/16W	R315	ERJ3GEYJ270	Metal	27 ohms 1/16W
R240	ERJ3GEYJ101V	Metal	100 ohms 1/16W	R316,317	ERJ3GEYJ101V	Metal	100 ohms 1/16W
R241	ERJ3GEYJ103V	Metal	10K ohms 1/16W	R318,319	ERJ3GEYJ102V	Metal	1K ohms 1/16W
R242	ERJ3GEYJ101V	Metal	100 ohms 1/16W	R320,321	ERJ3GEYJ101V	Metal	100 ohms 1/16W
R243,244	ERJ3GEYJ2R2V	Metal	2.2 ohms 1/16W	R322	YWR1220Q750D	Metal	75 ohms 1/10W
R245	YWR0816P102D	Metal	100 ohms 1/16W	R323,324	ERJ3GEYJ101V	Metal	100 ohms 1/16W
R246,247	ERJ3GEYJ2R2V	Metal	2.2 ohms 1/16W	R325,326	ERJ3GEYJ102V	Metal	1K ohms 1/16W
R251	ERJ3GEYJ101V	Metal	100 ohms 1/16W	R327	ERJ3GEYJ222V	Metal	2.2K ohms 1/16W
R252	YWR1220Q750D	Metal	75 ohms 1/10W	R328	ERJ3GEYJ154V	Metal	150K ohms 1/16W
R253,254	ERJ3GEYJ103V	Metal	10K ohms 1/16W	R329	ERJ3GEYJ101V	Metal	100 ohms 1/16W
R255,256	ERJ3GEYJ102V	Metal	1K ohms 1/16W	R330	ERJ3GEYJ222V	Metal	2.2K ohms 1/16W
R257	ERJ3GEYJ222V	Metal	2.2K ohms 1/16W	R331	ERJ3GEYJ304V	Metal	300K ohms 1/16W
R258	ERJ3GEYJ154V	Metal	150K ohms 1/16W	R332	ERJ3GEYJ222V	Metal	2.2K ohms 1/16W
R259	ERJ3GEYJ101V	Metal	100 ohms 1/16W	R333	ERJ3GEYJ332V	Metal	3.3K ohms 1/16W

REF. NO.	PART NO.	DESCRIPTION		REF. NO.	PART NO.	DESCRIPTION	
R334	ERJ3GEYJ222V	Metal	1K ohms 1/16W	R412	ERJ3GEYJ222V	Metal	2.2K ohms 1/16W
R335	ERJ3GEYJ270	Metal	27 ohms 1/16W	R413	ERJ3GEYJ332V	Metal	3.3K ohms 1/16W
R336,337	ERJ3GEYJ101V	Metal	100 ohms 1/16W	R414	ERJ3GEYJ102V	Metal	1K ohms 1/16W
R338,339	ERJ3GEYJ102V	Metal	1K ohms 1/16W	R415	ERJ3GEYJ270	Metal	27 ohms 1/16W
R340	ERJ3GEYJ101V	Metal	100 ohms 1/16W	R416,417	ERJ3GEYJ101V	Metal	100 ohms 1/16W
R341	ERJ3GEYJ103V	Metal	10K ohms 1/16W	R418,419	ERJ3GEYJ102V	Metal	1K ohms 1/16W
R342	ERJ3GEYJ101V	Metal	100 ohms 1/16W	R420,421	ERJ3GEYJ101V	Metal	100 ohms 1/16W
R343,344	ERJ3GEYJ2R2V	Metal	2.2 ohms 1/16W	R422	YWR1220Q750D	Metal	75 ohms 1/10W
R345	ERJ3GEYJ101V	Metal	100 ohms 1/16W	R423,424	ERJ3GEYJ103V	Metal	10K ohms 1/16W
R346,347	ERJ3GEYJ2R2V	Metal	2.2 ohms 1/16W	R425,426	ERJ3GEYJ102V	Metal	1K ohms 1/16W
R351	ERJ3GEYJ101V	Metal	100 ohms 1/16W	R427	ERJ3GEYJ222V	Metal	2.2K ohms 1/16W
R352	YWR1220Q750D	Metal	75 ohms 1/10W	R428	ERJ3GEYJ154V	Metal	150K ohms 1/16W
R353,354	ERJ3GEYJ103V	Metal	10K ohms 1/16W	R429	ERJ3GEYJ101V	Metal	100 ohms 1/16W
R355,356	ERJ3GEYJ102V	Metal	1K ohms 1/16W	R430	ERJ3GEYJ222V	Metal	2.2K ohms 1/16W
R357	ERJ3GEYJ222V	Metal	2.2K ohms 1/16W	R431	ERJ3GEYJ304V	Metal	300K ohms 1/16W
R358	ERJ3GEYJ154V	Metal	150K ohms 1/16W	R432	ERJ3GEYJ222V	Metal	2.2K ohms 1/16W
R359	ERJ3GEYJ101V	Metal	100 ohms 1/16W	R433	ERJ3GEYJ332V	Metal	3.3K ohms 1/16W
R360	ERJ3GEYJ222V	Metal	2.2K ohms 1/16W	R434	ERJ3GEYJ102V	Metal	1K ohms 1/16W
R361	ERJ3GEYJ304V	Metal	300K ohms 1/16W	R435	ERJ3GEYJ270	Metal	27 ohms 1/16W
R362	ERJ3GEYJ222V	Metal	2.2K ohms 1/16W	R436,437	ERJ3GEYJ101V	Metal	100 ohms 1/16W
R363	ERJ3GEYJ332V	Metal	3.3K ohms 1/16W	R438,439	ERJ3GEYJ102V	Metal	1K ohms 1/16W
R364	ERJ3GEYJ102V	Metal	1K ohms 1/16W	R440	ERJ3GEYJ101V	Metal	100 ohms 1/16W
R365	ERJ3GEYJ270	Metal	27 ohms 1/16W	R441	ERJ3GEYJ103V	Metal	10K ohms 1/16W
R366,367	ERJ3GEYJ101V	Metal	100 ohms 1/16W	R442	ERJ3GEYJ101V	Metal	100 ohms 1/16W
R368,369	ERJ3GEYJ102V	Metal	1K ohms 1/16W	R443,444	ERJ3GEYJ2R2V	Metal	2.2 ohms 1/16W
R370,371	ERJ3GEYJ101V	Metal	100 ohms 1/16W	R445	ERJ3GEYJ101V	Metal	100 ohms 1/16W
R372	YWR1220Q750D	Metal	75 ohms 1/10W	R446,447	ERJ3GEYJ2R2V	Metal	2.2 ohms 1/16W
R373,374	ERJ3GEYJ103V	Metal	10K ohms 1/16W	R451	ERJ3GEYJ101V	Metal	100 ohms 1/16W
R375,376	ERJ3GEYJ102V	Metal	1K ohms 1/16W	R452	YWR1220Q750D	Metal	75 ohms 1/10W
R377	ERJ3GEYJ222V	Metal	2.2K ohms 1/16W	R453,454	ERJ3GEYJ103V	Metal	10K ohms 1/16W
R378	ERJ3GEYJ154V	Metal	150K ohms 1/16W	R455,456	ERJ3GEYJ102V	Metal	1K ohms 1/16W
R379	ERJ3GEYJ101V	Metal	100 ohms 1/16W	R457	ERJ3GEYJ222V	Metal	2.2K ohms 1/16W
R380	ERJ3GEYJ222V	Metal	2.2K ohms 1/16W	R458	ERJ3GEYJ154V	Metal	150K ohms 1/16W
R381	ERJ3GEYJ304V	Metal	300K ohms 1/16W	R459	ERJ3GEYJ101V	Metal	100 ohms 1/16W
R382	ERJ3GEYJ222V	Metal	2.2K ohms 1/16W	R460	ERJ3GEYJ222V	Metal	2.2K ohms 1/16W
R383	ERJ3GEYJ332V	Metal	3.3K ohms 1/16W	R461	ERJ3GEYJ304V	Metal	300K ohms 1/16W
R384	ERJ3GEYJ102V	Metal	1K ohms 1/16W	R462	ERJ3GEYJ222V	Metal	2.2K ohms 1/16W
R385	ERJ3GEYJ270	Metal	27 ohms 1/16W	R463	ERJ3GEYJ332V	Metal	3.3K ohms 1/16W
R386,387	ERJ3GEYJ101V	Metal	100 ohms 1/16W	R464	ERJ3GEYJ102V	Metal	1K ohms 1/16W
R388,389	ERJ3GEYJ102V	Metal	1K ohms 1/16W	R465	ERJ3GEYJ270	Metal	27 ohms 1/16W
R390	ERJ3GEYJ101V	Metal	100 ohms 1/16W	R466,467	ERJ3GEYJ101V	Metal	100 ohms 1/16W
R391	ERJ3GEYJ103V	Metal	10K ohms 1/16W	R468,469	ERJ3GEYJ102V	Metal	1K ohms 1/16W
R392	ERJ3GEYJ101V	Metal	100 ohms 1/16W	R470,471	ERJ3GEYJ101V	Metal	100 ohms 1/16W
R393,394	ERJ3GEYJ2R2V	Metal	2.2 ohms 1/16W	R472	YWR1220Q750D	Metal	75 ohms 1/10W
R395	ERJ3GEYJ101V	Metal	100 ohms 1/16W	R473,474	ERJ3GEYJ103V	Metal	10K ohms 1/16W
R396,397	ERJ3GEYJ2R2V	Metal	2.2 ohms 1/16W	R475,476	ERJ3GEYJ102V	Metal	1K ohms 1/16W
R401	ERJ3GEYJ101V	Metal	100 ohms 1/16W	R477	ERJ3GEYJ222V	Metal	2.2K ohms 1/16W
R402	YWR1220Q750D	Metal	75 ohms 1/10W	R478	ERJ3GEYJ154V	Metal	150K ohms 1/16W
R403,404	ERJ3GEYJ103V	Metal	10K ohms 1/16W	R479	ERJ3GEYJ101V	Metal	100 ohms 1/16W
R405,406	ERJ3GEYJ102V	Metal	1K ohms 1/16W	R480	ERJ3GEYJ222V	Metal	2.2K ohms 1/16W
R407	ERJ3GEYJ222V	Metal	2.2K ohms 1/16W	R481	ERJ3GEYJ304V	Metal	300K ohms 1/16W
R408	ERJ3GEYJ154V	Metal	150K ohms 1/16W	R482	ERJ3GEYJ222V	Metal	2.2K ohms 1/16W
R409	ERJ3GEYJ101V	Metal	100 ohms 1/16W	R483	ERJ3GEYJ332V	Metal	3.3K ohms 1/16W
R410	ERJ3GEYJ222V	Metal	2.2K ohms 1/16W	R484	ERJ3GEYJ102V	Metal	1K ohms 1/16W
R411	ERJ3GEYJ304V	Metal	300K ohms 1/16W	R485	ERJ3GEYJ270	Metal	27 ohms 1/16W

REF. NO.	PART NO.	DESCRIPTION		REF. NO.	PART NO.	DESCRIPTION	
R486,487	ERJ3GEYJ101V	Metal	100 ohms 1/16W	R724	ERJ3GEYJ104V	Metal	100K ohms 1/16W
R488,489	ERJ3GEYJ102V	Metal	1K ohms 1/16W	R725	ERJ3GEYJ395V	Metal	3.9M ohms 1/16W
R490	ERJ3GEYJ101V	Metal	100 ohms 1/16W	R726	ERJ3GEYJ472V	Metal	4.7K ohms 1/16W
R491	ERJ3GEYJ103V	Metal	10K ohms 1/16W	R727	ERJ3GEYJ224V	Metal	220K ohms 1/16W
R492	ERJ3GEYJ101V	Metal	100 ohms 1/16W	R728	ERJ3GEYJ104V	Metal	100K ohms 1/16W
R493,494	ERJ3GEYJ2R2V	Metal	2.2 ohms 1/16W	R731	ERJ3GEYJ512V	Metal	5.1K ohms 1/16W
R495	ERJ3GEYJ101V	Metal	100 ohms 1/16W	R732	ERJ3GEYJ222V	Metal	2.2K ohms 1/16W
R496,497	ERJ3GEYJ2R2V	Metal	2.2 ohms 1/16W	R733	ERJ3GEYJ332V	Metal	3.3K ohms 1/16W
R501-524	ERJ3GEYJ102V	Metal	1K ohms 1/16W	R735-738	ERJ3GEYJ223V	Metal	22K ohms 1/16W
R553	ERJ3GEYJ221V	Metal	220 ohms 1/16W	R739	ERJ3GEYJ305	Metal	3M ohms 1/16W
R555	ERJ3GEYJ102V	Metal	1K ohms 1/16W	R740,741	ERJ3GEYJ103V	Metal	10K ohms 1/16W
R556-561	ERJ3GEYJ223V	Metal	22K ohms 1/16W	R742	ERJ3GEYJ332V	Metal	3.3K ohms 1/16W
R611	ERJ3GEYJ102V	Metal	1K ohms 1/16W	R743	ERJ3GEYJ104V	Metal	100K ohms 1/16W
R612	YWR0816P102D	Metal	1K ohms 1/16W	R745-747	ERJ3GEYJ223V	Metal	22K ohms 1/16W
R613	ERJ3GEYJ751V	Metal	750 ohms 1/16W	VR611,621	EVM1DSW30B13	Semifixed Resistor	1K ohms
R614	YWR0816P102D	Metal	1K ohms 1/16W	VR631	EVM1DSW30B13	Semifixed Resistor	1K ohms
R615	ERJ3GEYJ132V	Metal	1.3K ohms 1/16W	C13-15	F2H0J220001	Electrolytic	220 µF 6.3V
R616,617	ERJ3GEYJ103V	Metal	10K ohms 1/16W	C101	EEVHP0J470P	Electrolytic	47 µF 6.3V
R618	ERJ3GEYJ102V	Metal	1K ohms 1/16W	C102	MCUV1E104ZFV	Ceramic	0.1 µF
R619	ERJ3GEYJ101V	Metal	100 ohms 1/16W	C103	F1H1H101A004	Ceramic	100 pF
R621	ERJ3GEYJ102V	Metal	1K ohms 1/16W	C104	F1H1A105A004	Ceramic	1 µF
R622	YWR0816P102D	Metal	1K ohms 1/16W	C105	F1H1H331A650	Ceramic	330 pF
R623	ERJ3GEYJ751V	Metal	750 ohms 1/16W	C106	F1H1C104A001	Ceramic	0.1 µF
R624	YWR0816P102D	Metal	1K ohms 1/16W	C107	F2G0J010002	Electrolytic	100 µF 6.3V
R625	ERJ3GEYJ132V	Metal	1.3K ohms 1/16W	C121	EEVHP0J470P	Electrolytic	47 µF 6.3V
R626,627	ERJ3GEYJ103V	Metal	10K ohms 1/16W	C122	MCUV1E104ZFV	Ceramic	0.1 µF
R628	ERJ3GEYJ102V	Metal	1K ohms 1/16W	C123	F1H1H101A004	Ceramic	100 pF
R629	ERJ3GEYJ101V	Metal	100 ohms 1/16W	C124	F1H1A105A004	Ceramic	1 µF
R631	ERJ3GEYJ102V	Metal	1K ohms 1/16W	C125	F1H1H331A650	Ceramic	330 pF
R632	YWR0816P102D	Metal	1K ohms 1/16W	C126	F1H1C104A001	Ceramic	0.1 µF
R633	ERJ3GEYJ751V	Metal	750 ohms 1/16W	C127	F2G0J010002	Electrolytic	100 µF 6.3V
R634	YWR0816P102D	Metal	1K ohms 1/16W	C142,143	MCUV1E104ZFV	Ceramic	0.1 µF
R635	ERJ3GEYJ132V	Metal	1.3K ohms 1/16W	C151	EEVHP0J470P	Electrolytic	47 µF 6.3V
R636,637	ERJ3GEYJ103V	Metal	10K ohms 1/16W	C152	MCUV1E104ZFV	Ceramic	0.1 µF
R638	ERJ3GEYJ102V	Metal	1K ohms 1/16W	C153	F1H1H101A004	Ceramic	100 pF
R639,640	ERJ3GEYJ101V	Metal	100 ohms 1/16W	C154	F1H1A105A004	Ceramic	1 µF
R642,644	ERJ3GEYJ101V	Metal	100 ohms 1/16W	C155	F1H1H331A650	Ceramic	330 pF
R701	ERJ3GEYJ203V	Metal	20K ohms 1/16W	C156	F1H1C104A001	Ceramic	0.1 µF
R702	ERJ3GEY0R00	Metal	0 ohm 1/16W	C157	F2G0J010002	Electrolytic	100 µF 6.3V
R703	ERJ3GEYJ104V	Metal	100K ohms 1/16W	C171	EEVHP0J470P	Electrolytic	47 µF 6.3V
R704	ERJ3GEYJ153V	Metal	15K ohms 1/16W	C172	MCUV1E104ZFV	Ceramic	0.1 µF
R705	ERJ3GEYJ563V	Metal	56K ohms 1/16W	C173	F1H1H101A004	Ceramic	100 pF
R706	ERJ3GEYJ273V	Metal	27K ohms 1/16W	C174	F1H1A105A004	Ceramic	1 µF
R707	ERJ3GEYJ513V	Metal	51K ohms 1/16W	C175	F1H1H331A650	Ceramic	330 pF
R708	ERJ3GEYJ104V	Metal	100K ohms 1/16W	C176	F1H1C104A001	Ceramic	0.1 µF
R709	ERJ3GEYJ395V	Metal	3.9M ohms 1/16W	C177	F2G0J010002	Electrolytic	100 µF 6.3V
R710	ERJ3GEYJ225V	Metal	2.2M ohms 1/16W	C192,193	MCUV1E104ZFV	Ceramic	0.1 µF
R711	ERJ3GEYJ332V	Metal	3.3K ohms 1/16W	C201	EEVHP0J470P	Electrolytic	47 µF 6.3V
R713	ERJ3GEYJ472V	Metal	4.7K ohms 1/16W	C202	MCUV1E104ZFV	Ceramic	0.1 µF
R714	ERJ3GEYJ224V	Metal	220K ohms 1/16W	C203	F1H1H101A004	Ceramic	100 pF
R715	ERJ3GEYJ512V	Metal	5.1K ohms 1/16W	C204	F1H1A105A004	Ceramic	1 µF
R718	ERJ3GEYJ222V	Metal	2.2K ohms 1/16W	C205	F1H1H331A650	Ceramic	330 pF
R719	ERJ3GEYJ123V	Metal	12K ohms 1/16W	C206	F1H1C104A001	Ceramic	0.1 µF
R722	ERJ3GEYJ303V	Metal	30K ohms 1/16W	C207	F2G0J010002	Electrolytic	100 µF 6.3V
R723	ERJ3GEYJ912V	Metal	9.1K ohms 1/16W	C221	EEVHP0J470P	Electrolytic	47 µF 6.3V

REF. NO.	PART NO.	DESCRIPTION		REF. NO.	PART NO.	DESCRIPTION	
C222	MCUV1E104ZFV	Ceramic	0.1 µF	C404	F1H1A105A004	Ceramic	1 µF
C223	F1H1H101A004	Ceramic	100 pF	C405	F1H1H331A650	Ceramic	330 pF
C224	F1H1A105A004	Ceramic	1 µF	C406	F1H1C104A001	Ceramic	0.1 µF
C225	F1H1H331A650	Ceramic	330 pF	C407	F2G0J010002	Electrolytic	100 µF 6.3V
C226	F1H1C104A001	Ceramic	0.1 µF	C421	EEVHP0J470P	Electrolytic	47 µF 6.3V
C227	F2G0J010002	Electrolytic	100 µF 6.3V	C422	MCUV1E104ZFV	Ceramic	0.1 µF
C242,243	MCUV1E104ZFV	Ceramic	0.1 µF	C423	F1H1H101A004	Ceramic	100 pF
C251	EEVHP0J470P	Electrolytic	47 µF 6.3V	C424	F1H1A105A004	Ceramic	1 uF
C252	MCUV1E104ZFV	Ceramic	0.1 µF	C425	F1H1H331A650	Ceramic	330 pF
C253	F1H1H101A004	Ceramic	100 pF	C426	F1H1C104A001	Ceramic	0.1 µF
C254	F1H1A105A004	Ceramic	1 µF	C427	F2G0J010002	Electrolytic	100 µF 6.3V
C255	F1H1H331A650	Ceramic	330 pF	C442,443	MCUV1E104ZFV	Ceramic	0.1 µF
C256	F1H1C104A001	Ceramic	0.1 µF	C451	EEVHP0J470P	Electrolytic	47 µF 6.3V
C257	F2G0J010002	Electrolytic	100 µF 6.3V	C452	MCUV1E104ZFV	Ceramic	0.1 µF
C271	EEVHP0J470P	Electrolytic	47 µF 6.3V	C453	F1H1H101A004	Ceramic	100 pF
C272	MCUV1E104ZFV	Ceramic	0.1 µF	C454	F1H1A105A004	Ceramic	1 µF
C273	F1H1H101A004	Ceramic	100 pF	C455	F1H1H331A650	Ceramic	330 pF
C274	F1H1A105A004	Ceramic	1 µF	C456	F1H1C104A001	Ceramic	0.1 µF
C275	F1H1H331A650	Ceramic	330 pF	C457	F2G0J010002	Electrolytic	100 µF 6.3V
C276	F1H1C104A001	Ceramic	0.1 µF	C471	EEVHP0J470P	Electrolytic	47 µF 6.3V
C277	F2G0J010002	Electrolytic	100 µF 6.3V	C472	MCUV1E104ZFV	Ceramic	0.1 µF
C292,293	MCUV1E104ZFV	Ceramic	0.1 µF	C473	F1H1H101A004	Ceramic	100 pF
C301	EEVHP0J470P	Electrolytic	47 µF 6.3V	C474	F1H1A105A004	Ceramic	1 µF
C302	MCUV1E104ZFV	Ceramic	0.1 µF	C475	F1H1H331A650	Ceramic	330 pF
C303	F1H1H101A004	Ceramic	100 pF	C476	F1H1C104A001	Ceramic	0.1 µF
C304	F1H1A105A004	Ceramic	1 µF	C477	F2G0J010002	Electrolytic	100 µF 6.3V
C305	F1H1H331A650	Ceramic	330 pF	C492-493	MCUV1E104ZFV	Ceramic	0.1 µF
C306	F1H1C104A001	Ceramic	0.1 µF	C501	F2H0J220001	Electrolytic	220 µF 6.3V
C307	F2G0J010002	Electrolytic	100 µF 6.3V	C502-504	MCUV1E104ZFV	Ceramic	0.1 µF
C321	EEVHP0J470P	Electrolytic	47 µF 6.3V	C525	YWTB1C106M8R	Tantalum	10 µF 16V
C322	MCUV1E104ZFV	Ceramic	0.1 µF	C601	F1H0J105A001	Ceramic	1 µF
C323	F1H1H101A004	Ceramic	100 pF	C602	MCUV1E104ZFV	Ceramic	0.1 µF
C324	F1H1A105A004	Ceramic	1 µF	C603,604	F1H0J105A001	Ceramic	1 µF
C325	F1H1H331A650	Ceramic	330 pF	C605	MCUV1E104ZFV	Ceramic	0.1 µF
C326	F1H1C104A001	Ceramic	0.1 µF	C611	F1H1H110A231	Ceramic	11 pF
C327	F2G0J010002	Electrolytic	100 µF 6.3V	C612	F1H1H5R00002	Ceramic	5 pF
C342,343	MCUV1E104ZFV	Ceramic	0.1 µF	C613	MCUV1H470JCV	Ceramic	47 pF
C351	EEVHP0J470P	Electrolytic	47 µF 6.3V	C614	F1H1H1R50002	Ceramic	1.5 pF
C352	MCUV1E104ZFV	Ceramic	0.1 µF	C615	F1H1H130A004	Ceramic	13 pF
C353	F1H1H101A004	Ceramic	100 pF	C616	MCUV1E104ZFV	Ceramic	0.1 µF
C354	F1H1A105A004	Ceramic	1 µF	C617	F1H0J105A001	Ceramic	1 µF
C355	F1H1H331A650	Ceramic	330 pF	C618	F2G0J010002	Electrolytic	100 µF 6.3V
C356	F1H1C104A001	Ceramic	0.1 µF	C621	F1H1H110A231	Ceramic	11 pF
C357	F2G0J010002	Electrolytic	100 µF 6.3V	C622	F1H1H5R00002	Ceramic	5 pF
C371	EEVHP0J470P	Electrolytic	47 µF 6.3V	C623	MCUV1H470JCV	Ceramic	47 pF
C372	MCUV1E104ZFV	Ceramic	0.1 µF	C624	F1H1H1R50002	Ceramic	1.5 pF
C373	F1H1H101A004	Ceramic	100 pF	C625	F1H1H130A004	Ceramic	13 pF
C374	F1H1A105A004	Ceramic	1 µF	C626	MCUV1E104ZFV	Ceramic	0.1 µF
C375	F1H1H331A650	Ceramic	330 pF	C627	F1H0J105A001	Ceramic	1 µF
C376	F1H1C104A001	Ceramic	0.1 µF	C631	F1H1H110A231	Ceramic	11 pF
C377	F2G0J010002	Electrolytic	100 µF 6.3V	C632	F1H1H5R00002	Ceramic	5 pF
C392,393	MCUV1E104ZFV	Ceramic	0.1 µF	C633	MCUV1H470JCV	Ceramic	47 pF
C401	EEVHP0J470P	Electrolytic	47 µF 6.3V	C634	F1H1H1R50002	Ceramic	1.5 pF
C402	MCUV1E104ZFV	Ceramic	0.1 µF	C635	F1H1H130A004	Ceramic	13 pF
C403	F1H1H101A004	Ceramic	100 pF	C636	MCUV1E104ZFV	Ceramic	0.1 µF

REF. NO.	PART NO.	DESCRIPTION	
C637	F1H0J105A001	Ceramic	1 µF
C638	F2G0J101000 2	Electrolytic	100 µF 6.3V
C639,640	MCUV1E104ZFV	Ceramic	0.1 µF
C641	F2G0J101000 2	Electrolytic	100 µF 6.3V
C701	F2G1C1010004	Electrolytic	100 µF 16V
C702	F1H1E224A004	Ceramic	0.22 µF
C703	MCUV1E104ZFV	Ceramic	0.1 µF
C704	F2G1C1000002	Electrolytic	10 µF 16V
C705	F1H1A105A004	Ceramic	1 µF
C706,707	MCUV1E104ZFV	Ceramic	0.1 µF
C708	F2G0J101000 2	Electrolytic	100 µF 6.3V
C709	F2G1C1000002	Electrolytic	10 µF 16V
C711	F1H1A105A004	Ceramic	1 µF
C712	MCUV1E104ZFV	Ceramic	0.1 µF
C713	F2G0J101000 2	Electrolytic	100 µF 6.3V
C714-716	MCUV1E104ZFV	Ceramic	0.1 µF
C717	F2G1C1000002	Electrolytic	10 µF 16V
L101,121	G1C8R2J00002	Coil	8.2 µH
L151,171	G1C8R2J00002	Coil	8.2 µH
L172	YWPC10220K	Coil	22 µH
L173,174	G0ZZ00000349	Coil	33 µH
L201,221	G1C8R2J00002	Coil	8.2 µH
L251,271	G1C8R2J00002	Coil	8.2 µH
L301,321	G1C8R2J00002	Coil	8.2 µH
L351,371	G1C8R2J00002	Coil	8.2 µH
L401,421	G1C8R2J00002	Coil	8.2 µH
L451,471	G1C8R2J00002	Coil	8.2 µH
L501,504	G1C8R2J00002	Coil	8.2 µH
L611	ELJFC330KF	Coil	33 µH
L612	ELJFC390KF	Coil	39 µH
L613	G1C8R2J00002	Coil	8.2 µH
L621	ELJFC330KF	Coil	33 µH
L622	ELJFC390KF	Coil	39 µH
L631	ELJFC330KF	Coil	33 µH
L632	ELJFC390KF	Coil	39 µH
L633,701	G1C8R2J00002	Coil	8.2 µH
L702,703	G1C8R2J00002	Coil	8.2 µH
CN11	K1MN15A00008	15-pin Connector	
CN13	K1KA40A00140	40-pin Connector	
CN14	YWLC04T	4-pin Connector	
CN15	K1KA07A00009	7-pin Connector	
CN16	K1KA04B00080	4-pin Connector	
CN17	YWB4P-VH	4-pin Connector	
CN101,121	K1QDB2CB0003	BNC Connector	
CN151,171	K1QBB2CB0003	BNC Connector	
CN201,221	K1QBB2CB0003	BNC Connector	
CN251,271	K1QBB2CB0003	BNC Connector	
CN301,321	K1QBB2CB0003	BNC Connector	
CN351,371	K1QBB2CB0003	BNC Connector	
CN401,421	K1QBB2CB0003	BNC Connector	
CN451,471	K1QBB2CB0003	BNC Connector	
CN501,502	K1KB52A00012	52-pin Connector	
CN701	YW173979-2	2-pin Connector	
SF13,14	K5H502A00001	Current Fuse	5 A 125V
E1-7	YWMEP1866	Terminal	

REF. NO.	PART NO.	DESCRIPTION
TP11-14	YW32BM7R5	Test-pin
M82	V2SA4900A3	Mounting Angle

REAR BOARD

PCB3 (RTL)	JH500IKR1A	Printed Circuit Board Assy
IC301-304	YWHD74HC257F	IC
IC305,306	C0JBAF000252	IC
IC307	YWNJM2267VT1	IC
IC308,309	C0ABCA000021	IC
IC310	C0JBAR000155	IC
IC311	YWNJM2267VT1	IC
IC401	C0JBAA000234	IC
Q101,106	B1GDCFJ00002	Transistor
Q111,116	B1GDCFJ00002	Transistor
Q121,126	B1GDCFJ00002	Transistor
Q131,136	B1GDCFJ00002	Transistor
Q141	B1GBGFGG0002	Transistor
Q146	B1GDCFJ00002	Transistor
Q151	B1GBGFGG0002	Transistor
Q156	B1GDCFJ00002	Transistor
Q161,166	B1GDCFJ00002	Transistor
Q171,176	B1GDCFJ00002	Transistor
Q181,186	B1GDCFJ00002	Transistor
Q191,196	B1GDCFJ00002	Transistor
Q201,206	B1GDCFJ00002	Transistor
Q211,216	B1GDCFJ00002	Transistor
Q221,226	B1GDCFJ00002	Transistor
Q231	B1GBGFGG0002	Transistor
Q236,241	B1GDCFJ00002	Transistor
Q246,251	B1GDCFJ00002	Transistor
Q252	2SC2412K-T46	Transistor
Q261	B1GBGFGG0002	Transistor
Q266,271	B1GDCFJ00002	Transistor
Q276	B1GDCFJ00002	Transistor
Q281,286	B1GBGFGG0002	Transistor
Q291,296	B1GBGFGG0002	Transistor
Q298	B1GBGFGG0002	Transistor
Q301	2SC2412K-T46	Transistor
Q302	2SD1819-RSTX	Transistor
D301-303	B0ADCC000003	Diode
D304-307	MAZ80560ML	Diode
TH101	ERY32SB050VA	Thermistor
R101	ERJ3GEYJ101V	Metal 100 ohms 1/16W
R102	ERJ3GEYJ332V	Metal 3.3K ohms 1/16W

REF. NO.	PART NO.	DESCRIPTION	
R106	ERJ3GEYJ101V	Metal	100 ohms 1/16W
R107	ERJ3GEYJ332V	Metal	3.3K ohms 1/16W
R111	ERJ3GEYJ101V	Metal	100 ohms 1/16W
R112	ERJ3GEYJ332V	Metal	3.3K ohms 1/16W
R116	ERJ3GEYJ101V	Metal	100 ohms 1/16W
R117	ERJ3GEYJ332V	Metal	3.3K ohms 1/16W
R121	ERJ3GEYJ101V	Metal	100 ohms 1/16W
R122	ERJ3GEYJ332V	Metal	3.3K ohms 1/16W
R126	ERJ3GEYJ101V	Metal	100 ohms 1/16W
R127	ERJ3GEYJ332V	Metal	3.3K ohms 1/16W
R131	ERJ3GEYJ101V	Metal	100 ohms 1/16W
R132	ERJ3GEYJ332V	Metal	3.3K ohms 1/16W
R136	ERJ3GEYJ101V	Metal	100 ohms 1/16W
R137	ERJ3GEYJ332V	Metal	3.3K ohms 1/16W
R141	ERJ3GEY0R00	Metal	0 ohm 1/16W
R146	ERJ3GEYJ101V	Metal	100 ohms 1/16W
R147	ERJ3GEYJ332V	Metal	3.3K ohms 1/16W
R151	ERJ3GEYJ101V	Metal	100 ohms 1/16W
R155	ERDS2TJ221	Carbon	220 ohms 1/4W
R156	ERJ3GEYJ100V	Metal	10 ohms 1/16W
R157	ERJ3GEYJ332V	Metal	3.3K ohms 1/16W
R158	ERJ3GEYJ103V	Metal	10K ohms 1/16W
R161	ERJ3GEYJ101V	Metal	100 ohms 1/16W
R162	ERJ3GEYJ332V	Metal	3.3K ohms 1/16W
R166	ERJ3GEYJ101V	Metal	100 ohms 1/16W
R167	ERJ3GEYJ332V	Metal	3.3K ohms 1/16W
R171	ERJ3GEYJ101V	Metal	100 ohms 1/16W
R172	ERJ3GEYJ332V	Metal	3.3K ohms 1/16W
R176	ERJ3GEYJ101V	Metal	100 ohms 1/16W
R177	ERJ3GEYJ332V	Metal	3.3K ohms 1/16W
R181	ERJ3GEYJ101V	Metal	100 ohms 1/16W
R182	ERJ3GEYJ332V	Metal	3.3K ohms 1/16W
R186	ERJ3GEYJ101V	Metal	100 ohms 1/16W
R187	ERJ3GEYJ332V	Metal	3.3K ohms 1/16W
R191	ERJ3GEYJ101V	Metal	100 ohms 1/16W
R192	ERJ3GEYJ332V	Metal	3.3K ohms 1/16W
R196	ERJ3GEYJ101V	Metal	100 ohms 1/16W
R197	ERJ3GEYJ332V	Metal	3.3K ohms 1/16W
R198,201	ERJ3GEYJ101V	Metal	100 ohms 1/16W
R202	ERJ3GEYJ332V	Metal	3.3K ohms 1/16W
R206	ERJ3GEYJ101V	Metal	100 ohms 1/16W
R207	ERJ3GEYJ332V	Metal	3.3K ohms 1/16W
R211	ERJ3GEYJ101V	Metal	100 ohms 1/16W
R212	ERJ3GEYJ332V	Metal	3.3K ohms 1/16W
R216	ERJ3GEYJ101V	Metal	100 ohms 1/16W
R217	ERJ3GEYJ332V	Metal	3.3K ohms 1/16W
R221	ERJ3GEYJ101V	Metal	100 ohms 1/16W
R222	ERJ3GEYJ332V	Metal	3.3K ohms 1/16W
R226	ERJ3GEYJ101V	Metal	100 ohms 1/16W
R227	ERJ3GEYJ332V	Metal	3.3K ohms 1/16W
R231	ERJ3GEY0R00	Metal	0 ohm 1/16W
R236	ERJ3GEYJ101V	Metal	100 ohms 1/16W
R237	ERJ3GEYJ332V	Metal	3.3K ohms 1/16W
R241	ERJ3GEYJ101V	Metal	100 ohms 1/16W
R242	ERJ3GEYJ332V	Metal	3.3K ohms 1/16W

REF. NO.	PART NO.	DESCRIPTION	
R246	ERJ3GEYJ101V	Metal	100 ohms 1/16W
R247	ERJ3GEYJ332V	Metal	3.3K ohms 1/16W
R251	ERJ3GEYJ101V	Metal	100 ohms 1/16W
R252	ERJ3GEYJ332V	Metal	3.3K ohms 1/16W
R256,261	ERJ3GEY0R00	Metal	0 ohm 1/16W
R266,271	ERJ3GEY0R00	Metal	0 ohm 1/16W
R276	ERJ3GEYJ101V	Metal	100 ohms 1/16W
R277	ERJ3GEYJ332V	Metal	3.3K ohms 1/16W
R281,286	ERJ3GEY0R00	Metal	0 ohm 1/16W
R291,296	ERJ3GEY0R00	Metal	0 ohm 1/16W
R298	ERJ3GEY0R00	Metal	0 ohm 1/16W
R301,302	ERJ3GEYJ123V	Metal	12K ohms 1/16W
R303	ERJ3GEYJ103V	Metal	10K ohms 1/16W
R304	ERJ3GEYJ474V	Metal	470K ohms 1/16W
R305	ERJ3GEYJ683V	Metal	68K ohms 1/16W
R307	ERJ3GEY0R00	Metal	0 ohm 1/16W
R309	ERJ3GEYJ103V	Metal	10K ohms 1/16W
R310	ERJ3GEYJ104V	Metal	100K ohms 1/16W
R311	ERJ3GEYJ103V	Metal	10K ohms 1/16W
R312	ERJ3GEYJ104V	Metal	100K ohms 1/16W
R313	ERJ3GEYJ621V	Metal	620 ohms 1/16W
R314	ERJ3GEYJ103V	Metal	10K ohms 1/16W
R315	ERJ3GEYJ273V	Metal	27K ohms 1/16W
R316	ERJ3GEYJ223V	Metal	22K ohms 1/16W
R317-320	ERJ3GEYJ103V	Metal	10K ohms 1/16W
R321	ERJ3GEYJ101V	Metal	100 ohms 1/16W
R322	ERJ3GEYJ203V	Metal	20K ohms 1/16W
R323-328	ERJ3GEYJ103V	Metal	10K ohms 1/16W
R329,330	ERJ3GEYJ105V	Metal	1M ohms 1/16W
R331	ERJ3GEYJ620V	Metal	62 ohms 1/16W
R332	ERJ3GEYJ750V	Metal	75 ohms 1/16W
R351-353	ERJ12YJ151H	Metal	150 ohms 1/2W
R355	ERJ3GEYJ182V	Metal	1.8K ohms 1/16W
R356	ERJ3GEYJ222V	Metal	2.2K ohms 1/16W
R357	ERJ3GEY0R00	Metal	0 ohm 1/16W
R358-360	ERJ3GEYJ103V	Metal	10K ohms 1/16W
R401,402	ERJ3GEYJ220V	Metal	22 ohms 1/16W
R403,404	ERJ3GEYJ680V	Metal	68 ohms 1/16W
R405,406	ERJ3GEYJ562V	Metal	5.6K ohms 1/16W
R407,408	ERJ3GEYJ272V	Metal	2.7K ohms 1/16W
R409	ERJ3GEYJ151V	Metal	150 ohms 1/16W
C101	MCUV1E104ZFV	Ceramic	0.1 µF
C102	F1H1H103A013	Ceramic	0.01 µF
C106	MCUV1E104ZFV	Ceramic	0.1 µF
C107	F1H1H103A013	Ceramic	0.01 µF
C111	MCUV1E104ZFV	Ceramic	0.1 µF
C112	F1H1H103A013	Ceramic	0.01 µF
C116	MCUV1E104ZFV	Ceramic	0.1 µF
C117	F1H1H103A013	Ceramic	0.01 µF
C121	MCUV1E104ZFV	Ceramic	0.1 µF
C122	F1H1H103A013	Ceramic	0.01 µF
C126	MCUV1E104ZFV	Ceramic	0.1 µF
C127	F1H1H103A013	Ceramic	0.01 µF
C131	MCUV1E104ZFV	Ceramic	0.1 µF
C132	F1H1H103A013	Ceramic	0.01 µF

REF. NO.	PART NO.	DESCRIPTION	
C136	MCUV1E104ZFV	Ceramic	0.1 µF
C137	F1H1H103A013	Ceramic	0.01 µF
C141,146	MCUV1E104ZFV	Ceramic	0.1 µF
C147	F1H1H103A013	Ceramic	0.01 µF
C151,156	MCUV1E104ZFV	Ceramic	0.1 µF
C157	F1H1H103A013	Ceramic	0.01 µF
C161	MCUV1E104ZFV	Ceramic	0.1 µF
C162	F1H1H103A013	Ceramic	0.01 µF
C166	MCUV1E104ZFV	Ceramic	0.1 µF
C167	F1H1H103A013	Ceramic	0.01 µF
C171	MCUV1E104ZFV	Ceramic	0.1 µF
C172	F1H1H103A013	Ceramic	0.01 µF
C176	MCUV1E104ZFV	Ceramic	0.1 µF
C177	F1H1H103A013	Ceramic	0.01 µF
C181	MCUV1E104ZFV	Ceramic	0.1 µF
C182	F1H1H103A013	Ceramic	0.01 µF
C186	MCUV1E104ZFV	Ceramic	0.1 µF
C187	F1H1H103A013	Ceramic	0.01 µF
C191	MCUV1E104ZFV	Ceramic	0.1 µF
C192	F1H1H103A013	Ceramic	0.01 µF
C196	MCUV1E104ZFV	Ceramic	0.1 µF
C197	F1H1H103A013	Ceramic	0.01 µF
C198,201	MCUV1E104ZFV	Ceramic	0.1 µF
C202	F1H1H103A013	Ceramic	0.01 µF
C206	MCUV1E104ZFV	Ceramic	0.1 µF
C207	F1H1H103A013	Ceramic	0.01 µF
C211	MCUV1E104ZFV	Ceramic	0.1 µF
C212	F1H1H103A013	Ceramic	0.01 µF
C216	MCUV1E104ZFV	Ceramic	0.1 µF
C217	F1H1H103A013	Ceramic	0.01 µF
C221	MCUV1E104ZFV	Ceramic	0.1 µF
C222	F1H1H103A013	Ceramic	0.01 µF
C226	MCUV1E104ZFV	Ceramic	0.1 µF
C227	F1H1H103A013	Ceramic	0.01 µF
C231,236	MCUV1E104ZFV	Ceramic	0.1 µF
C237	F1H1H103A013	Ceramic	0.01 µF
C241	MCUV1E104ZFV	Ceramic	0.1 µF
C242	F1H1H103A013	Ceramic	0.01 µF
C246	MCUV1E104ZFV	Ceramic	0.1 µF
C247	F1H1H103A013	Ceramic	0.01 µF
C251	MCUV1E104ZFV	Ceramic	0.1 µF
C252	F1H1H103A013	Ceramic	0.01 µF
C256,261	MCUV1E104ZFV	Ceramic	0.1 µF
C266,271	MCUV1E104ZFV	Ceramic	0.1 µF
C276	MCUV1E104ZFV	Ceramic	0.1 µF
C277	F1H1H103A013	Ceramic	0.01 µF
C281,286	MCUV1E104ZFV	Ceramic	0.1 µF
C291,296	MCUV1E104ZFV	Ceramic	0.1 µF
C298,301	MCUV1E104ZFV	Ceramic	0.1 µF
C302	F1H1A105A004	Ceramic	1 µF
C303	EEVHB0J101P	Electrolytic	100 µF 6.3V
C304-309	MCUV1E104ZFV	Ceramic	0.1 µF
C310,311	F1H0J105A001	Ceramic	1 µF
C312	F1H1A105A004	Ceramic	1 µF
C313	EEVHB0J101P	Electrolytic	100 µF 6.3V

REF. NO.	PART NO.	DESCRIPTION	
C314	EEVHB1C100R	Electrolytic	10 µF 16V
C315	MCUV1E104ZFV	Ceramic	0.1 µF
C316	F1H1H562A013	Ceramic	5600 pF
C317	F1H1E1530002	Ceramic	0.015 µF
C318	F1H1H821A013	Ceramic	820 pF
C319	F1H1H562A013	Ceramic	5600 pF
C320	F1H1E1530002	Ceramic	0.015 µF
C321	F1H1H821A013	Ceramic	820 pF
C322	MCUV1E104ZFV	Ceramic	0.1 µF
C323	MCUV1E104ZFV	Ceramic	0.1 µF
C324	F1H1H102A004	Ceramic	1000 pF
C325	F1H1H103A013	Ceramic	0.01 µF
C326,327	F1H0J105A001	Ceramic	1 µF
C328	CCV1H0G220R	Electrolytic	22 µF 6.3V
C329	EEVHB0J101P	Electrolytic	100 µF 6.3V
C330	MCUV1E104ZFV	Ceramic	0.1 µF
C331	EEVHB0J221P	Electrolytic	220 µF 6.3V
C332	EEVHB0J220R	Electrolytic	22 µF 6.3V
C333	EEVHB0J101P	Electrolytic	100 µF 6.3V
C334	MCUV1E104ZFV	Ceramic	0.1 µF
C335	EEVHB0J221P	Electrolytic	220 µF 6.3V
C401-407	F1G1E152Z001	Ceramic	1500 pF
C410,411	F1H1H221A004	Ceramic	220 pF
C412	EEVHB0J101P	Electrolytic	100 µF 6.3V
C413	MCUV1E104ZFV	Ceramic	0.1 µF
C414	F1H1H103A013	Ceramic	0.01 µF
L101	G1C101J00002	Coil	100 µH
L102	G1C151J00001	Coil	150 µH
L106,111	G1C101J00002	Coil	100 µH
L116,121	G1C101J00002	Coil	100 µH
L126,131	G1C101J00002	Coil	100 µH
L136	G1C101J00002	Coil	100 µH
L141	G1C151J00001	Coil	150 µH
L146,151	G1C101J00002	Coil	100 µH
L156,161	G1C101J00002	Coil	100 µH
L166,171	G1C101J00002	Coil	100 µH
L176,181	G1C101J00002	Coil	100 µH
L186,191	G1C101J00002	Coil	100 µH
L196,198	G1C101J00002	Coil	100 µH
L201,206	G1C101J00002	Coil	100 µH
L211,216	G1C101J00002	Coil	100 µH
L221,226	G1C101J00002	Coil	100 µH
L231,236	G1C101J00002	Coil	100 µH
L241,246	G1C101J00002	Coil	100 µH
L251,256	G1C101J00002	Coil	100 µH
L261,266	G1C101J00002	Coil	100 µH
L271,276	G1C101J00002	Coil	100 µH
L281,286	G1C101J00002	Coil	100 µH
L291,296	G1C101J00002	Coil	100 µH
L298	G1C101J00002	Coil	100 µH
L301-304	G1C8R2J00002	Coil	8.2 µH
L401-405	J0JCC0000049	Coil	
L410	G1C8R2J00002	Coil	8.2 µH
CF309	YWNFA41R222T	Ceramic Filter	
SW302	K0C411B00001	Mode Selector Switch	

REF. NO.	PART NO.	DESCRIPTION
CN12	K1FB111D0001	1-pin Connector
CN101,201	YWJBY2S31A3G	D Sub Connector
CN301,302	YWTM11R5C06	Modular Jack
CN303	K1QBB2CB0003	BNC Connector
CN304	JEY9P1A3G13	9-pin Connector
CN305	K2HA204B0015	Jack
CN402	K1KA50A00125	50-pin Connector
E1,2	YWMEP1866	Terminal
TP301	YWRCT2125TPV	Test-pin

FRONT BOARD

PCB4 (RTL)	JH500JKZ3A	Printed Circuit Board Assy
IC801	C2CJBAF000132	IC
IC802,803	C0JBAF000408	IC
IC804	C0JBAZ001009	IC
Q801	YWXN0450100L	Transistor
Q802-806	B1GDCFGG0001	Transistor
Q807	YWXN0450100L	Transistor
Q808	B1GDCFGG0001	Transistor
Q809	YWXN0450100L	Transistor
Q810	B1GDCFGG0001	Transistor
Q811-816	B1GDCFGG0001	Transistor
D819,825	LN1461C3UTR	LED
D801-816	LNJ115W88RA	LED
D817	LN242RP	LED
D818	LN442YP	LED
D820	LN1361CTR	LED
D821	LN442YP	LED
D822-824	LN1361CTR	LED
D826	LN342GP	LED
D827,828	LN1361CTR	LED
R801,802	ERJ3GEYJ101V	Metal 100 ohms 1/16W
R804	ERJ3GEY0R00	Metal 0 ohm 1/16W
R805	ERJ3GEYJ103V	Metal 10K ohms 1/16W
R806	ERJ3GEYJ151V	Metal 150 ohms 1/16W
R807	ERJ3GEYJ152V	Metal 1.5K ohms 1/16W
R808	ERJ3GEYJ151V	Metal 150 ohms 1/16W
R809	ERJ3GEYJ152V	Metal 1.5K ohms 1/16W
R810	ERJ3GEYJ151V	Metal 150 ohms 1/16W
R811	ERJ3GEYJ152V	Metal 1.5K ohms 1/16W
R812	ERJ3GEYJ151V	Metal 150 ohms 1/16W
R813	ERJ3GEYJ152V	Metal 1.5K ohms 1/16W
R814	ERJ3GEYJ151V	Metal 150 ohms 1/16W
R815	ERJ3GEYJ152V	Metal 1.5K ohms 1/16W
R816	ERJ3GEYJ151V	Metal 150 ohms 1/16W
R817	ERJ3GEYJ152V	Metal 1.5K ohms 1/16W

REF. NO.	PART NO.	DESCRIPTION	
R818	ERJ3GEYJ151V	Metal	150 ohms 1/16W
R819	ERJ3GEYJ152V	Metal	1.5K ohms 1/16W
R820	ERJ3GEYJ151V	Metal	150 ohms 1/16W
R821	ERJ3GEYJ152V	Metal	1.5K ohms 1/16W
R822-829	ERJ3GEYJ123V	Metal	12K ohms 1/16W
R830	ERJ3GEYJ151V	Metal	150 ohms 1/16W
R831	ERJ3GEYJ152V	Metal	1.5K ohms 1/16W
R832	ERJ3GEYJ151V	Metal	150 ohms 1/16W
R833	ERJ3GEYJ152V	Metal	1.5K ohms 1/16W
R834	ERJ3GEYJ151V	Metal	150 ohms 1/16W
R835	ERJ3GEYJ152V	Metal	1.5K ohms 1/16W
R836	ERJ3GEYJ151V	Metal	150 ohms 1/16W
R837	ERJ3GEYJ152V	Metal	1.5K ohms 1/16W
R838	ERJ3GEYJ151V	Metal	150 ohms 1/16W
R839	ERJ3GEYJ152V	Metal	1.5K ohms 1/16W
R840	ERJ3GEYJ151V	Metal	150 ohms 1/16W
R841	ERJ3GEYJ152V	Metal	1.5K ohms 1/16W
R842	ERJ3GEYJ151V	Metal	150 ohms 1/16W
R843	ERJ3GEYJ152V	Metal	1.5K ohms 1/16W
R844	ERJ3GEYJ151V	Metal	150 ohms 1/16W
R845	ERJ3GEYJ152V	Metal	1.5K ohms 1/16W
R846	ERJ3GEYJ301V	Metal	300 ohms 1/16W
R847	ERJ3GEYJ271V	Metal	270 ohms 1/16W
R848	ERJ3GEYJ181V	Metal	180 ohms 1/16W
R849	ERJ3GEYJ151V	Metal	150 ohms 1/16W
R850	ERJ3GEYJ271V	Metal	270 ohms 1/16W
R851	ERJ3GEYJ121V	Metal	120 ohms 1/16W
R852-855	ERJ3GEYJ123V	Metal	12K ohms 1/16W
R856	ERJ3GEYJ151V	Metal	150 ohms 1/16W
R857,858	ERJ3GEYJ121V	Metal	120 ohms 1/16W
R859-864	ERJ3GEYJ102V	Metal	1K ohms 1/16W
R865-870	ERJ3GEYJ103V	Metal	10K ohms 1/16W
R871	ERJ3GEYJ271V	Metal	270 ohms 1/16W
R872,873	ERJ3GEYJ151V	Metal	150 ohms 1/16W
R874	ERJ3GEYJ103V	Metal	10K ohms 1/16W
C801	F2G0J470000 2	Electrolytic	47 µF 6.3V
C802,805	MCUV1E104ZFV	Ceramic	0.1 µF
C806	MCUV1E104ZFV	Ceramic	0.1 µF
C807-809	F2G0J470000 2	Electrolytic	47 µF 6.3V
C810	MCUV1E104ZFV	Ceramic	0.1 µF
C811-816	F1H1H103A013	Ceramic	0.01 µF
L801	G1C5R6J00001	Coil	5.6 H
SW801	K0H1BA000363	Tact Switch	
SW802,804	EVQPJX05M	Push Switch	
SW805-835	EVQPJX05M	Push Switch	
SW836	K0N218C00003	Rotary Switch	
X801	H2D147500003	Oscillator	
CN403	K1KA13B00041	13-pin Connector	
CN801	ELYD09V505	Wire Assy for LED Board CN11	
M81	LK5	LED Spacer (x4)	

REF. NO.	PART NO.	DESCRIPTION
LED BOARD		
PCB5 (RTL)	JH500JKC1A	Printed Circuit Board Assy
Q12,13	B1GDCFGG0001	Transistor
D11	YWSLR325MGT	LED
D12,13	YWSLR325DUT	LED
R11-13	ERJ3GEYJ271V	Metal 270 ohms 1/16W
CN11	YW530150510	5-pin Connector
E1,2	YWMEP1866	Terminal
POWER BOARD		
PCB6 (RTL)	JH500EKZ4A	Printed Circuit Board Assy
IC1 ⚠	MIP0227SY	IC
IC2	YWTA76431S	IC
IC3	C0DAEZH00002	IC
Q1,2 ⚠	YWPC123FY2	Photocoupler
D1 ⚠	YWD3SB60	Diode
D2	B0BAZZ100002	Diode
D3	YWERB3710	Diode
D4	YWSC2012	Diode
D5	YWSF10LC20U	Diode
D8,9	YWSF10SC6	Diode
D11	DAP202K T46	Diode
VS1 ⚠	ERZV07D471	ZNR
R1 ⚠	ERC12GM105	Solid 1M ohms 1/2W
R2,3	ERJ14YJ913	Metal 91K ohms 1/4W
R4	ERJ14Y0R00H	Metal 0 ohm 1/4W
R6	ERG3SJ181P	Metal 180 ohms 3W
R7	ERJ6GEYJ4R7V	Metal 4.7 ohms 1/10W
R8-10	YF2116470JT	Metal 47 ohms 1/10W
R11	ERG5SJ333	Metal 33K ohms 5W
R13	D1BD56R00001	Metal 56 ohms 1/10W
R14	YWR1220P332D	Metal 3.3K ohms 1/10W
R15	YWR1220P391D	Metal 390 ohms 1/10W
R19	ERJ14YJ150	Metal 15 ohms 1/4W
R20,21	ERJ6GEYJ221V	Metal 220 ohms 1/10W
R22	ERJ6GEYJ104V	Metal 100K ohms 1/10W
R23	YF2116470JT	Metal 47 ohms 1/10W
R24	ERJ6GEYJ332V	Metal 3.3K ohms 1/10W
R25	ERJ6GEYJ682V	Metal 6.8K ohms 1/10W
R27	ERJ6GEYJ102V	Metal 1K ohms 1/10W
R29	ERJ6GEYJ562V	Metal 5.6K ohms 1/10W
VR2	D3CA51020010	Variable Resistor
C1 ⚠	ECQU2A563MT	Plastic 0.056 µF 100V
C2,3 ⚠	F1B2E1520002	Ceramic 1500 pF
C4 ⚠	ECQU2A563MT	Plastic 0.056 µF 100V

REF. NO.	PART NO.	DESCRIPTION
C6	EC0S2GB471EB	Electrolytic 470 µF 400V
C7	MCUV1E104KBN	Ceramic 0.1 µF
C8	ECQE6473KF	Plastic 0.047 µF 630V
C9	F1J1C1050002	Ceramic 1 µF
C10	EEUEB1A101	Electrolytic 100 µF 10V
C11,12	EEUFC1E392L	Electrolytic 3900 µF 25V
C13,14	MCUV1E104KBN	Ceramic 0.1 µF
C15	EEUFC1E331L	Electrolytic 330 µF 25V
C16	ECKDHT681KB	Ceramic 680 pF
C17,18	EEUFC1A822L	Electrolytic 8200 µF 10V
C20	MCUV1E104KBN	Ceramic 0.1 µF
C21	EEUFC1A471	Electrolytic 470 µF 10V
C23,24	EEUFC1A822L	Electrolytic 8200 µF 10V
C25	EEUFC1A471	Electrolytic 470 µF 10V
C26 ⚠	F1B2E1520002	Ceramic 1500 pF
C27	ECKD3D101KRP	Ceramic 100 pF
C33	F1J1C1050002	Ceramic 1 µF
L1,2 ⚠	J0HBZG000001	Line Filter
L6,7	G0ZZ00000349	Coil 33 µH
T1 ⚠	G4D3A0000026	Power Transformer
F1 ⚠	K5D312BK0003	Current Fuse 3.15 A 250V
F2 ⚠	K5D502BK0002	Current Fuse 5 A 250V
SW1 ⚠	YWSDDFA3	Push Switch
CN1 ⚠	YWB2P3VH	2-pin Connector
CN2	YWLC04T	4-pin Connector
CN4	YW53014-0210	2-pin Connector
E1-4 ⚠	K3GE1BB00004	Fuse Holder
E5-7	YWMEP1866	Terminal
E8 ⚠	YWM1748	Holder for IC1
E9	K9ZZ00000151	Holder for IC3, IC4
E10 ⚠	JHD500L10A	Jumper Wire
E11	YWB4P-VH	4-pin Connector
E13,14 ⚠	YFCD20NCCAP	Insulator Cap for E10
E15 ⚠	B1ZZZ0000015	Insulator Cap for IC1
E16 ⚠	YWB40522	Fuse Cover for F1
M83	YWAC-256	Cool Sheet (x2)
M84	PC1724C35PB	Heat Sink (x2)
M85	V7DA1146B2	Heat Sink
SCSI-IDE BOARD		
Note: SCSI-IDE Board Assy (PCB7) is supplied as Assy only.		
PCB7 (RTL)	N5DZZ0000002	Printed Circuit Board Assy

REF. NO.	PART NO.	DESCRIPTION
MOTION DETECTOR BOARD		
PCB8 (RTL)	JHDB51KZ1A	Printed Circuit Board Assy
IC101	C0FBAD000003	IC
IC102,103	C0JBAS000091	IC
IC150	YWNJM2267VT1	IC
IC151	YW74HC04ADTE	IC
IC152,153	C0JBAZ000005	IC
IC160	C0JBAZ001058	IC
IC201	C0FBAD000003	IC
IC202,203	C0JBAS000091	IC
IC602,604	C0JBAZ000529	IC
IC609,610	C0JBAB000413	IC
IC613	C1ZBZ0001228	IC
IC614	C3DAKA000014	IC
IC615	C3BBKG000022	IC
IC617	C0JBAZ000529	IC
IC619	C0DBEZ000001	IC
Q101	2SD1819AHL	Transistor
Q102	2SB1218AHL	Transistor
Q103-105	2SD1819AHL	Transistor
Q106	2SB1218AHL	Transistor
Q107,201	2SD1819AHL	Transistor
Q202	2SB1218AHL	Transistor
Q203-205	2SD1819AHL	Transistor
Q206	2SB1218AHL	Transistor
Q207	2SD1819AHL	Transistor
Q601	B1CBBF000007	Transistor
Q602	B1CHDC000001	FET
Q603	B1CFDC000003	FET
Q604	B1CBBF000007	Transistor
Q605	B1CHDC000001	FET
Q606	B1CFDC000003	FET
Q613-620	2SD1819AHL	Transistor
D601	LN1361CTR	LED
D602,603	MA2Z372E0L	Diode
D604	LN1361CTR	LED
D605	MA2Z372E0L	Diode
D612-619	LN1261CTR	LED
D620	MA2Z372E0L	Diode
R101-103	ERJ3GEY0R00	Metal 0 ohm 1/16W
R104	ERJ3GEYJ471V	Metal 470 ohms 1/16W
R105	ERJ3GEYJ101V	Metal 100 ohms 1/16W
R106	ERJ3GEYJ472V	Metal 4.7K ohms 1/16W
R107	ERJ3GEYJ331V	Metal 330 ohms 1/16W
R108	ERJ3GEYJ102V	Metal 1K ohms 1/16W
R109	ERJ3GEY0R00	Metal 0 ohm 1/16W
R111	ERJ3GEYJ332V	Metal 3.3K ohms 1/16W
R112	ERJ3GEYJ472V	Metal 4.7K ohms 1/16W
R113	ERJ3GEYJ102V	Metal 1K ohms 1/16W
R114	ERJ3GEYJ103V	Metal 10K ohms 1/16W
R115	ERJ3GEYJ132V	Metal 1.3K ohms 1/16W

REF. NO.	PART NO.	DESCRIPTION
R116	YWR0816P102D	Metal 1K ohms 1/16W
R117	ERJ3GEYJ272V	Metal 2.7K ohms 1/16W
R118	ERJ3GEYJ153V	Metal 15K ohms 1/16W
R119	ERJ3GEYJ102V	Metal 1K ohms 1/16W
R120	ERJ3GEYJ561V	Metal 560 ohms 1/16W
R122	ERJ3GEYJ222V	Metal 2.2K ohms 1/16W
R123	YWR0816P102D	Metal 1K ohms 1/16W
R124	ERJ3GEYJ101V	Metal 100 ohms 1/16W
R125	ERJ3GEYJ154V	Metal 150K ohms 1/16W
R126	ERJ3GEYJ102V	Metal 1K ohms 1/16W
R127,128	ERJ3GEYJ101V	Metal 100 ohms 1/16W
R201-203	ERJ3GEY0R00	Metal 0 ohm 1/16W
R204	ERJ3GEYJ471V	Metal 470 ohms 1/16W
R205	ERJ3GEYJ101V	Metal 100 ohms 1/16W
R206	ERJ3GEYJ472V	Metal 4.7K ohms 1/16W
R207	ERJ3GEYJ331V	Metal 330 ohms 1/16W
R208	ERJ3GEYJ102V	Metal 1K ohms 1/16W
R209	ERJ3GEY0R00	Metal 0 ohm 1/16W
R211	ERJ3GEYJ332V	Metal 3.3K ohms 1/16W
R212	ERJ3GEYJ472V	Metal 4.7K ohms 1/16W
R213	ERJ3GEYJ102V	Metal 1K ohms 1/16W
R214	ERJ3GEYJ103V	Metal 10K ohms 1/16W
R215	ERJ3GEYJ132V	Metal 1.3K ohms 1/16W
R216	YWR0816P102D	Metal 1K ohms 1/16W
R217	ERJ3GEYJ272V	Metal 2.7K ohms 1/16W
R218	ERJ3GEYJ153V	Metal 15K ohms 1/16W
R219	ERJ3GEYJ102V	Metal 1K ohms 1/16W
R220	ERJ3GEYJ561V	Metal 560 ohms 1/16W
R222	ERJ3GEYJ222V	Metal 2.2K ohms 1/16W
R223	YWR0816P102D	Metal 1K ohms 1/16W
R224	ERJ3GEYJ101V	Metal 100 ohms 1/16W
R225	ERJ3GEYJ154V	Metal 150K ohms 1/16W
R226	ERJ3GEYJ102V	Metal 1K ohms 1/16W
R227,228	ERJ3GEYJ101V	Metal 100 ohms 1/16W
R601	ERJ3GEYJ331V	Metal 330 ohms 1/16W
R602	ERJ3GEYJ332V	Metal 3.3K ohms 1/16W
R603-605	ERJ3GEYJ102V	Metal 1K ohms 1/16W
R606	ERJ3GEYJ332V	Metal 3.3K ohms 1/16W
R607,608	ERJ3GEYJ103V	Metal 10K ohms 1/16W
R609	ERJ3GEYJ471V	Metal 470 ohms 1/16W
R610	ERJ3GEYJ101V	Metal 100 ohms 1/16W
R611	ERJ3GEYJ331V	Metal 330 ohms 1/16W
R612	ERJ3GEYJ332V	Metal 3.3K ohms 1/16W
R613-615	ERJ3GEYJ102V	Metal 1K ohms 1/16W
R616	ERJ3GEYJ332V	Metal 3.3K ohms 1/16W
R617,618	ERJ3GEYJ103V	Metal 10K ohms 1/16W
R619	ERJ3GEYJ471V	Metal 470 ohms 1/16W
R620	ERJ3GEYJ101V	Metal 100 ohms 1/16W
R621	ERJ3GEYJ105V	Metal 1M ohms 1/16W
R643	ERJ3GEY0R00	Metal 0 ohm 1/16W
R647	ERJ3GEYJ220V	Metal 22 ohms 1/16W
R648-651	ERJ3GEYJ103V	Metal 10K ohms 1/16W
R652-659	ERJ3GEY0R00	Metal 0 ohm 1/16W
R661-666	ERJ3GEYJ103V	Metal 10K ohms 1/16W
R667-669	ERJ3GEY0R00	Metal 0 ohm 1/16W

REF. NO.	PART NO.	DESCRIPTION
R670	ERJ3GEYJ103V	Metal 10K ohms 1/16W
R671	ERJ3GEY0R00	Metal 0 ohm 1/16W
R672,673	ERJ3GEYJ103V	Metal 10K ohms 1/16W
R675	ERJ3GEYJ103V	Metal 10K ohms 1/16W
R676	ERJ3GEYJ220V	Metal 22 ohms 1/16W
R681,682	ERJ3GEYJ103V	Metal 10K ohms 1/16W
R683	ERJ3GEY0R00	Metal 0 ohm 1/16W
R684-689	ERJ3GEYJ103V	Metal 10K ohms 1/16W
R690-692	ERJ3GEY0R00	Metal 0 ohm 1/16W
R693,701	ERJ3GEYJ103V	Metal 10K ohms 1/16W
R702	ERJ3GEYJ103V	Metal 10K ohms 1/16W
R703	ERJ3GEY0R00	Metal 0 ohm 1/16W
R704	ERJ3GEYJ103V	Metal 10K ohms 1/16W
R705-712	ERJ3GEY0R00	Metal 0 ohm 1/16W
R713	ERJ3GEYJ101V	Metal 100 ohms 1/16W
R714	ERJ3GEYJ105V	Metal 1M ohms 1/16W
R715	ERJ3GEYJ471V	Metal 470 ohms 1/16W
R716-718	ERJ3GEYJ102V	Metal 1K ohms 1/16W
R720,722	ERJ3GEY0R00	Metal 0 ohm 1/16W
R723-726	ERJ3GEYJ103V	Metal 10K ohms 1/16W
R727-730	ERJ3GEY0R00	Metal 0 ohm 1/16W
R731	ERJ3GEYJ103V	Metal 10K ohms 1/16W
R732-735	ERJ3GEYJ391V	Metal 390 ohms 1/16W
R736-738	ERJ3GEYJ103V	Metal 10K ohms 1/16W
R739-742	ERJ3GEYJ391V	Metal 390 ohms 1/16W
R743-746	ERJ3GEYJ103V	Metal 10K ohms 1/16W
R748	ERJ3GEYJ105V	Metal 1M ohms 1/16W
R749-757	ERJ3GEY0R00	Metal 0 ohm 1/16W
R758	ERJ3GEYJ103V	Metal 10K ohms 1/16W
R759	YWR0816P121D	Metal 120 ohms 1/16W
R760	ERJ3GEY0R00	Metal 0 ohm 1/16W
R761	YWR0816P121D	Metal 120 ohms 1/16W
R762,763	ERJ3GEY0R00	Metal 0 ohm 1/16W
VR101	EVM1DSW30B13	Semifixed Resistor 1K ohms
VR102	EVM1DGA30B52	Semifixed Resistor
VR201	EVM1DSW30B13	Semifixed Resistor 1K ohms
VR202	EVM1DGA30B52	Semifixed Resistor
Z601,602	YWMNR14EJ220	Block Resistor 22 ohms
Z603-607	YWMNR14EJ103	Block Resistor 10K ohms
Z608	YWMNR14EJ220	Block Resistor 22 ohms
Z609	YWMNR14EJ103	Block Resistor 10K ohms
Z610	YWMNR14EJ220	Block Resistor 22 ohms
Z611	YWMNR14EJ103	Block Resistor 10K ohms
Z612	YWMNR14EJ220	Block Resistor 22 ohms
Z613	YWMNR14EJ103	Block Resistor 10K ohms
Z614	YWMNR14EJ220	Block Resistor 22 ohms
Z615	YWMNR14EJ103	Block Resistor 10K ohms
Z616-623	YWMNR14EJ220	Block Resistor 22 ohms
C102	MCUV1E104ZFV	Ceramic 0.1 µF
C103	F1H1H221A004	Ceramic 220 pF
C104-106	MCUV1E104ZFV	Ceramic 0.1 µF
C108	EEVHB0J101P	Electrolytic 100 µF 6.3V
C109,110	F1H0J105A001	Ceramic 1 µF
C112	F1H1H7R00002	Ceramic 7 pF
C113	F1H1H360A004	Ceramic 36 pF

REF. NO.	PART NO.	DESCRIPTION
C114	F1H1H220A004	Ceramic 22 pF
C115	F1H1H121A004	Ceramic 120 pF
C116	F1H1H220A004	Ceramic 22 pF
C117	F1H1H331A004	Ceramic 330 pF
C118	F1H1A105A004	Ceramic 1 µF
C150	MCUV1E104ZFV	Ceramic 0.1 µF
C151,152	F1H0J105A001	Ceramic 1 µF
C153	EEVHB0J221P	Electrolytic 220 µF 6.3V
C154-158	MCUV1E104ZFV	Ceramic 0.1 µF
C159	F1H1H102A004	Ceramic 1000 pF
C202	MCUV1E104ZFV	Ceramic 0.1 µF
C203	F1H1H221A004	Ceramic 220 pF
C204-206	MCUV1E104ZFV	Ceramic 0.1 µF
C208	EEVHB0J101P	Electrolytic 100 µF 6.3V
C209,210	F1H0J105A001	Ceramic 1 µF
C212	F1H1H7R00002	Ceramic 7 pF
C213	F1H1H360A004	Ceramic 36 pF
C214	F1H1H220A004	Ceramic 22 pF
C215	F1H1H121A004	Ceramic 120 pF
C216	F1H1H220A004	Ceramic 22 pF
C217	F1H1H331A004	Ceramic 330 pF
C218	F1H1A105A004	Ceramic 1 µF
C254,255	MCUV1E104ZFV	Ceramic 0.1 µF
C256	F1H1H102A004	Ceramic 1000 pF
C506	EEVHB0J221P	Electrolytic 220 µF 6.3V
C601	F1H1C104A001	Ceramic 0.1 µF
C602	F1H1H103A013	Ceramic 0.01 µF
C603	F1H1H100A017	Ceramic 10 pF
C604	F1H1H180A004	Ceramic 18 pF
C605,606	F1H1H331A004	Ceramic 330 pF
C607,608	MCUV1E104ZFV	Ceramic 0.1 µF
C609	F1H1C104A001	Ceramic 0.1 µF
C610	F1H1H103A013	Ceramic 0.01 µF
C611	F1H1H100A017	Ceramic 10 pF
C612	F1H1H331A004	Ceramic 330 pF
C613	F1H1H180A004	Ceramic 18 pF
C614,615	F1H1H331A004	Ceramic 330 pF
C616,617	MCUV1E104ZFV	Ceramic 0.1 µF
C636-653	F1H1H103A013	Ceramic 0.01 µF
C654	MCUV1E104ZFV	Ceramic 0.1 µF
C655,656	F1H1H331A004	Ceramic 330 pF
C657	F1H1H120A004	Ceramic 12 pF
C659	F1H1H220A004	Ceramic 22 pF
C660-672	MCUV1E104ZFV	Ceramic 0.1 µF
C673-675	ECST1CC336R	Tantalum 33 µF 16V
C676	F1H1H331A004	Ceramic 330 pF
C677	ECST1CC336R	Tantalum 33 µF 16V
C678,679	MCUV1E104ZFV	Ceramic 0.1 µF
C680	ECST1CC336R	Tantalum 33 µF 16V
C682	MCUV1E104ZFV	Ceramic 0.1 µF
C699	ECST1CC336R	Tantalum 33 µF 16V
L101	ELJFC101JF	Coil 100 µH
L102	ELJFC820JF	Coil 82 µH
L150	G1C8R2J00002	Coil 8.2 µH
L201	ELJFC101JF	Coil 100 µH

REF. NO.	PART NO.	DESCRIPTION
L202	ELJFC820JF	Coil 82 µH
L502	G1C8R2J00002	Coil 8.2 µH
L601-606	ELJPA100KF	Coil 10 µH
L607,608	EIC4EJ011E	Coil 1.92 µH
X601	H0J270500003	Crystal Oscillator
SW601	K0DZ22A00019	Slide Switch
CN101,601	K1KB52A00003	52-pin Connector
E601-603	K4CD01000002	Terminal
TP101-104	YWRCT21251TPV	Test-pin
TP201,601	YWRCT21251TPV	Test-pin
TP602,605	YWRCT21251TPV	Test-pin
ACCESSORY PARTS / PACKAGING PARTS		
E100 ⚠	YWKP610S75R	AC Power Cord
E101 ⚠	YWKP4819CE25	AC Power Cord
M27	V1EA10414A4	Hard Disk Fixing Screw (x4)
M28	V1BA0505A4	Sleeve (x4)
M29	V2PA1266A4	Absorber (x4)
M46	V4JA1159A4	Earth Lug
M90	XSB4+10FN	Screw for Rack Mounting Bracket (x4)
M91 ⚠	V8QA5595AN	Operating Instructions
M92 ⚠	V8QA5596AN	Operating Instructions
M93	PE26X40C05B	Polyethylene Bag
M94	YWT10X16C03	Polyethylene Bag (x3)
M95	PE20X35C05B	Polyethylene Bag
M96	YWV5PB0065A4	Rack Mounting Bracket (x2)
M97	PE55X71C1B	Polyethylene Bag
M98	V9CA4293AN	Packaging Assy

Printed in Japan
C-809 Ⓗ 5, 7, 23